Recommended Practices in Electric Propulsion for Standalone Hollow Cathode Testing

IEPC-2025-141

Presented at the 39th International Electric Propulsion Conference, Imperial College London, London, United Kingdom, 14-19 September 2025

Margaret M. Mooney*
Western Michigan University, Kalamazoo, MI, 49008, U.S.A.

Seth Thompson† and John D. Williams‡
Colorado State University, Fort Collins, CO, 80523, U.S.A.

Scott J. Hall§
Orbion Space Technology, Houghton, MI, 49931, U.S.A.

Dan Lev¶
Georgia Institute of Technology, Atlanta, GA, 30332, U.S.A.

George-Cristian Potrivitu‖
Aliena Pte. Ltd., 408544 Singapore

Giulia Becatti**
Aliena Pte. Ltd., 408544 Singapore and

Wayne Ohlinger††
Babson Park, Florida, 33827, U.S.A.

Hollow cathodes are used for beam neutralization and initiation of ionization in Hall thruster (HT) channels and for discharge plasma formation and beam neutralization in gridded ion engines (GIEs). Often, the cathodes are evaluated in a standalone configuration, where a plasma discharge is formed in a diode configuration between the hollow cathode and an anode electrode. These experiments can be used to characterize the ignition and stable operating conditions of the cathode. In addition, if properly configured, these tests can be used to extrapolate how the cathode will behave while operated with a thruster. This paper provides recommendations for standalone cathode testing, including vacuum facility requirements, power supply configuration, anode geometry, and diagnostic techniques to capture key performance metrics both passively and actively through measurement of operating parameters and plasma properties. Best practices are given for configuring the cathode experimental apparatus to closely replicate the thruster environment, but with compromises to achieve the desired level of fidelity.

∗Research Associate, Mechanical and Aerospace Engineering, margaret.m.mooney@wmich.edu.
†Research Scientist, Department of Mechanical Engineering, and Research Engineer at Plasma Controls, llc, seth.thompson@colostate.edu.
‡Professor, Department of Mechanical Engineering, and technical director at Plasma Controls, llc, john.d.williams@colostate.edu.
§Chief Engineer, Aurora, scott.hall@orbionspace.com.
¶Research Engineer, School of Aerospace Engineering, dan.lev@gatech.edu.
‖Chief Technology Officer and Co-founder, georgepotrivitu@aliena.sg.
∗∗Postdoc, Institute of Space Systems becattig@irs.uni-stuttgart.de.
††Consultant.

I. Introduction

Thermionic hollow cathodes are components of electric propulsion (EP) devices, such as Hall thrusters (HTs) and gridded ion thrusters (GITs), and they provide the electrons necessary for initiation of plasma formation, discharge plasma production, and plume neutralization. The behavior of the cathode impacts the overall efficiency and stability of the EP device, and in some cases, it can be the lifetime limiting component of the EP system, which both justify the need to characterize cathode performance and lifetime as part of the cathode and thruster development effort. Although standalone cathode experiments and testing with the cathode integrated with a thruster are important, the combination of experimental and modeling efforts has improved the understanding of hollow cathode physics, performance, and lifetime over the past two decades (Goebel 2008, Goebel 2010, Pedrini 2015, Mikellides 2018, Taunay 2020, Goebel 2021, Potrivitu 2022,).

The use of hollow cathodes in Hall thrusters (HTs) and gridded ion thrusters (GITs) has a history spanning many decades that is tied to the evolution of electric propulsion technology itself. Goebel et al, 2008, present a history of hollow cathodes and how the configurations of the present-day devices evolved over time to include a tube with an orifice plate attached to the downstream end and an electron emitting insert typically tubular in shape that is placed inside the hollow cathode tube at its downstream end and pressed against the orifice plate as shown in the hollow cathode assembly in Figure 1. The assembly also shows heater and keeper electrodes and a mount that isolates the cathode, heater, and keeper and holds the cathode concentric with the keeper. The keeper electrode consists of a tube and an orifice plate that completely encloses the cathode. A heater is not always required in some hollow cathode technologies, but when it is used it is often of the swagged design with an inner tantalum filament isolated from a surrounding tantalum tube about 1.5 mm in diameter. The thin coaxial heater is welded at one end to connect the filament and tube. It is then coiled around the cathode over a region near the cathode tip and a straight section (not shown in Figure 1) is used to bring it out of the mount. Current is flowed through the heater filament to heat the insert surface to the desired operating temperature. This heating process is used to both condition the insert and ignite the cathode. Radiation shielding is wrapped around the coiled section of the heater to reduce the heater power required. Guidelines are presented herein to test both heater-equipped and heaterless hollow cathode designs.

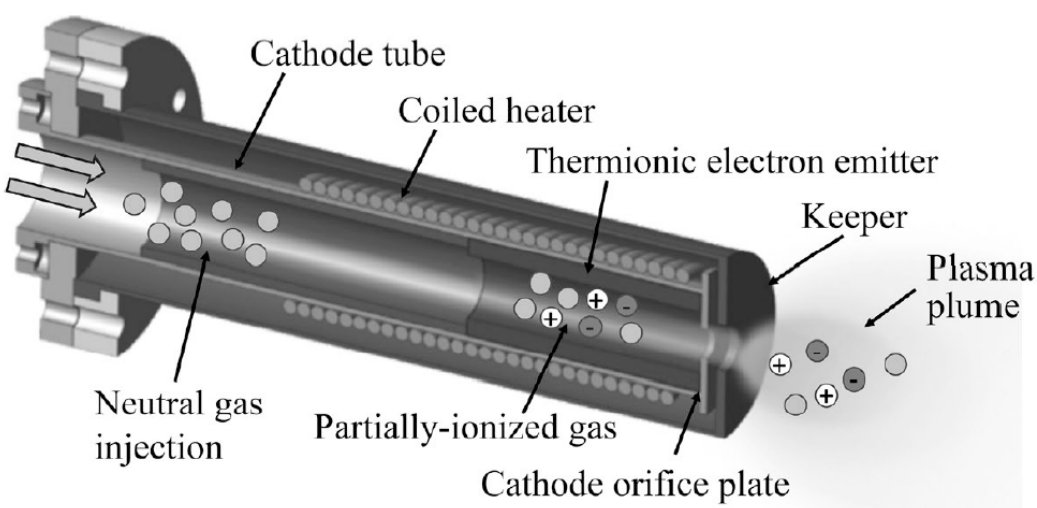

Figure 1: Typical hollow cathode and keeper assembly (from Goebel, et al, 2008).

The cathode orifice diameter is typically less than the inner diameter of the insert, and, consequently, at any given flowrate the orifice plate serves to increase the neutral density within the hollow cathode. Although the outer diameter of the cathode tube is often used to label a given cathode, it is the orifice diameter along with the orifice plate thickness and the inner diameter of the insert that play pivotal roles in determining the operating conditions of a hollow cathode. The geometry of the orifice is used to classify the hollow cathode, and ones with orifice plate thicknesses greater than, about equal to, and less than the orifice diameter have been labeled Class A, B, and C, respectively.

Briefly, two different types of inserts are used—porous tungsten that is impregnated with barium oxide containing compounds and lanthanum hexaboride (LaB_6). In the guidelines presented below cathodes that use BaO-based inserts require the use of a leak tight gas feed system that is described in more detail below. Cathodes that use LaB_6 -based inserts have been shown to be less sensitive to contamination from the gas feed system; however, we recommend that a similar, leak-tight gas feed system be used to ensure that any standalone cathode testing is not compromised by contamination in the gas.

In early gridded ion engines (GIEs), the current required from the cathode was typically less than 10 A, and often less than a few amperes. This resulted in the use of hollow cathode tubes less than 7 mm in diameter with cathode orifice diameters in the 1.5 mm range or less. Low current cathodes often have orifice plate thickness about 1-2 times or greater than the orifice diameter, which place them in the Class A or B category. Hall thrusters (HTs) in the sub-kilowatt range use similar cathodes. Typically, Class A cathodes experience significant orifice heating that largely drives the orifice plate temperature to be higher than the insert and other regions of the hollow cathode. Larger, higher power GIEs and medium-to-high power HTs typically employ cathodes that fall in the Class B or C categories to avoid excessive orifice plate heating that occurs at higher current operation. Current greater than 20 A usually dictates the use of Class C orifice plate geometry. The guidelines presented herein consider how hollow cathodes can be tested in a manner that accommodates the wide range of current over which these different cathodes are operated.

A range of parameters have been used to characterize cathode behavior, including discharge current and voltage oscillations, ignition characteristics, plasma property profile measurements, and quantification of component erosion. As mentioned above, hollow cathode operation has been studied both in the standalone configuration, where the cathode is operated with an electrode placed downstream of the cathode acting as the anode, and in the integrated thruster configuration, where the cathode is operated with a thruster. Standalone testing offers several advantages such as reduced facility requirements of lower pumping speed and lower input power, easier access for diagnostics, and greater flexibility in sweeping operating conditions. These benefits make standalone testing useful for ignition characterization, identification of stable operating envelopes, lifetime evaluation through wear testing, and model verification.

The standalone testing apparatus varies depending on the objectives of the experiment. Early development efforts focused on the verification of design goals and identification of regions of stability by sweeping mass flow rates and discharge currents. Certain metrics, such as floating keeper peak to-peak voltage oscillations, discharge current oscillations, or detection of energetic ions with remotely located energy analyzers, have been used to determine margins of stability. Measurements of plasma properties, both spatially and temporally, have also been used to determine operational stability.

Standalone testing setups have also been used to perform wear tests to determine how the cathode will behave throughout its lifetime. These include investigations into insert life due to (1) depletion of Ba from BaO-based cathodes and degradation of the insert surface for both BaO and LaB_6 cathodes, both of which alter the thermionic emission characteristics of the insert, and (2) sputtering of cathode, heater, and keeper surfaces due to energetic ion formation in the plasma formed downstream of the cathode. The configuration of the standalone tests has been found to have a significant impact on anode voltage magnitude and discharge stability (Potrivitu 2018, Potrivitu 2019, Polk 2012, Hall 2021, Mooney 2025, Farnell 2011).

Performance metrics of hollow cathodes can be less predictable over time, which is an issue that needs attention due to the long thruster lifetimes required by some interplanetary and lunar missions utilizing EP systems. Consequently, it is important to develop models of lifetime and validate them with experimental data from both standalone and integrated tests given the impracticality of conducting ground-based lifetime tests that span the full duration of long missions. We judge that when properly configured to match the thruster environment, standalone cathode experimental data can be used to validate models.

This paper provides recommended practices for performing standalone cathode testing using apparatus developed to meet specific test objectives. Section II describes recommended standalone cathode testing apparatus, including anode geometry, power supply systems and wiring harnesses with integrated filter components that replicate how cathodes are tested with thrusters; approaches for simulating the thruster magnetic field environment to ensure cathode behavior is representative of integrated operation, and gas feed system layout. Section III presents detailed recommendations for conducting standalone cathode experiments. These include recommendations for test facilities, such as vacuum chamber size, pumping capacity, and background pressure control; diagnostic tools and techniques for characterizing both plasma and cathode operating behavior; and considerations for performance of cathode wear tests to assist flight qualification efforts. Section IV offers a roadmap for standalone cathode testing, presenting step-by-step recommendations for planning and executing experiments. Finally, Section V contains our conclusions.

II. The Standalone Cathode Testing Apparatus

The standalone testing apparatus design is dependent in part on the cathode current requirements, which are specified by the power and voltage conditions of the HT or GIE. Many anode geometries have been utilized in standalone cathode tests that range from flat plates to hollow cylinders, and detailed discussions of geometries used to date are contained in Appendix A along with references.

Our recommendations are shown in Figure 2 for anode geometry for HTs and GIEs with cathodes that are intended to be placed on the thruster centerline. For HTs (see Figure 2a) we recommend a hollow cylinder anode made with ~3-mm thick stainless steel with an inner diameter, D, that is equal to the outer diameter of the discharge channel. This is a compromise between (1) researchers who prefer anodes with smaller diameters than this where the anode potential is more representative of the cathode to beam-plasma difference in an integrated thruster configuration and (2) researchers who prefer very large anodes where turbulent plasma conditions seen in integrated testing are better

simulated, but where excessive anode voltages are sometimes induced. Our recommendation falls closer to the small anode group as the outer diameter of HT channels scales somewhat with the size of the hollow cathode assembly, and magnetic field lines leaving the face of the simulator pole piece near the keeper will likely land on the interior surface of the anode.

The length, L, of the cylinder should be twice its diameter to ensure adequate anode area is available to collect the discharge current. We also recommend that the anode be cooled to minimize thermal impacts on the test facility. This is especially necessary when testing high current cathodes. Finally, we recommend that the anode be offset axially, L1, from the keeper exit at a location that is about a quarter of the axial distance the magnetic field line travels from the HT at the radius of the keeper that closes on the inside of the separatrix, whether that is on the outer pole or buried within the interior of the HT. Offsetting the anode by this distance ensures that some magnetic field lines leaving the magnetic simulator pole piece up intersecting the interior of the anode cylinder. Plasma coupling to the outside of anode can happen for certain test conditions in some test facilities, particularly with applied, HT-level magnetic fields. An isolated stainless steel cylinder shield can be placed around the outside of the anode electrode, as shown in figure 2A, to prevent this coupling.

For the main cathode of a GIE, we also recommend a hollow cylindrical anode that is aligned to the axis of the cathode, as shown in Figure 2b. The diameter of the anode should be equal to the ID of the GIE discharge chamber, and the axial distance between the exit plane of the keeper electrode and the entrance plane of the anode should be set to zero. The length of the anode should be equal to the diameter. Either permanent magnets or a solenoidal-based simulator can be used to replicate the magnetic field produced in the GIE in the vicinity of the main cathode. To evaluate a GIE neutralizer cathode, we recommend using the same setup in Figure 2b, but with no magnetic field applied. Furthermore, we recommend that this same setup be used without a magnetic field to test cathodes that are mounted externally to HTs.

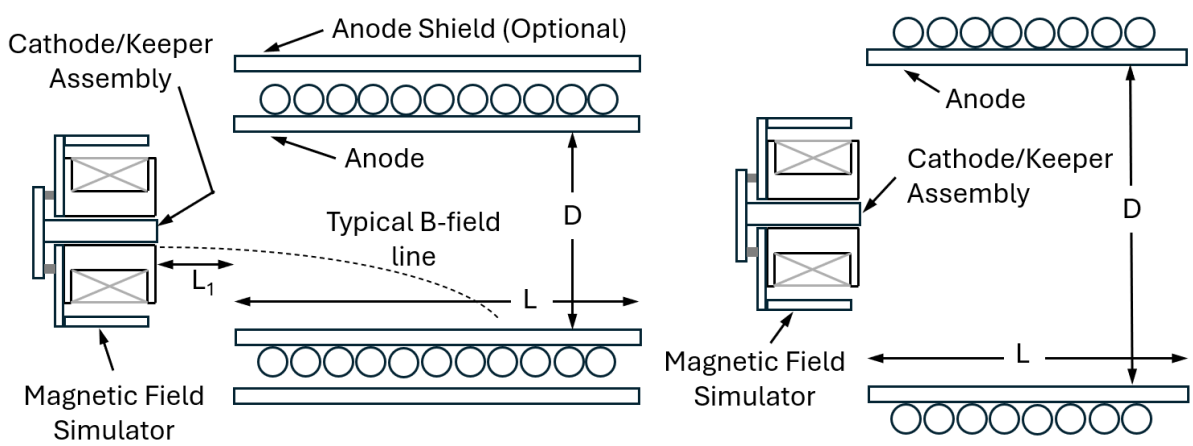

Figure 2. Anode electrode configuration recommendations for standalone testing of cathodes for HTs (a) and GIEs (b).

A. Electrical Configuration

Figure 3 shows our recommendation on how the anode, keeper, and heater power supplies should be connected to initiate and sustain cathode-keeper and cathode-anode plasma discharges. There isn't much flexibility in how power supplies can be connected to perform standalone testing, but there are large differences in supply designs from different companies and within different power supply lines from the same company. One purpose of standalone testing is to perform flow and current sweeps to map out where the cathode operation is stable, and power supplies with different control electronics and output capacitance interfere with these characterization tests. To help ensure standalone cathode testing is as similar as possible from one test facility to the next, we suggest that a L-C or R-C low-pass filter, with f_c set to ~ 1 kHz, be used between the anode power supply and the anode and cathode electrodes that decouples the anode power supply electronics from the discharge and prevents the power supply being used in any given test from disturbing cathode operation. The filter also protects the power supply when the cathode is operated in a highly unstable condition that can be encountered at low flow and high current. We also recommend that all the power supplies be protected with blocking and bypass diodes as shown in Figure 3, which we acknowledge is burdensome to do in the anode lead when high current cathodes are tested. In some cases, it is also useful to place a clamping circuit across the anode power supply to prevent its voltage from exceeding the over-voltage limit of the supply and damaging it.

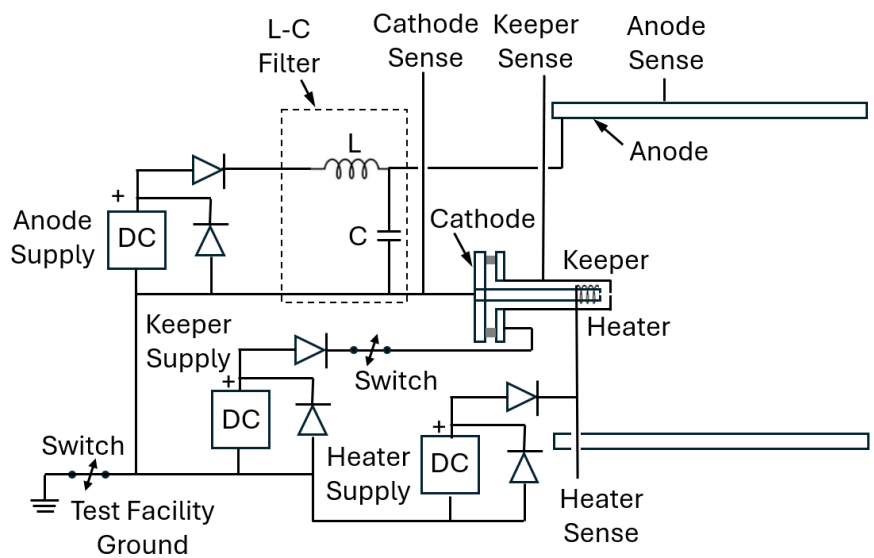

Figure 3. Electrical schematic of power supply layout with protection circuitry and sense leads for performing standalone hollow cathode testing.

We show the cathode electrical lead connected to the test facility ground in Figure 3. This is how most standalone cathode testing has been done. We recommend putting a switch in the line between cathode and ground to open the possibility of performing tests in a manner that better represents how integrated testing is performed, which is done by isolating the cathode from the test facility ground. By 'floating' the cathode, one could also open the possibility of testing the effects of grounding the magnetic field simulator or tying it to cathode potential, which is a topic of recent investigation in integrated HT testing.

Some keeper power supplies in power processor units for flight systems use a pulsing design rather than a DC bias, and such a power supply design could be substituted into the circuit shown in Figure 3. In addition, the keeper power supply is often switched off after the cathode-anode discharge is initiated. And in standalone tests, the keeper floating voltage is one signal that is used to judge the operational stability of the cathode by measuring the ratio of the keeper peak-to-peak voltage to its average voltage. Large ratios imply unstable operation and the possibility of forming high energy ions that can bombard, and then sputter erode cathode, keeper, and anode surfaces. To prevent the keeper power supply circuitry from perturbing the measurement of keeper voltage versus time, it is recommended that a switch be installed to isolate the keeper supply. We also recommend that sense leads be installed to the anode, cathode, keeper, and heater electrodes so that accurate measurements can be made of their voltages. Typically, the anode, keeper, and heater voltages are measured with their individual sense leads referenced with respect to the cathode sense lead, and the cathode-to-ground voltage, V_{cg}, is measured between the cathode sense lead and the test facility ground if the switch shown in the lead going to facility ground is opened. Finally, we recommend that high bandwidth capable current transducers be placed downstream of the L-C filter and used to measure current in the cathode and anode electrical leads so that ratios of peak-to-peak to average currents can be made.

As mentioned above, one useful, but arbitrary measure of relative cathode stability is to use a limit of 10% for the peak-to-peak to average ratios of cathode operational parameters—when the limit is exceeded then the cathode operation is deemed unstable, which is where excessively high energy ions can be formed that can erode cathode, keeper, and anode surfaces and can limit cathode life. We recommend doing stability characterization using waveforms of operating parameters in preliminary testing, and, if marginal stability is observed close to an operating point planned for use in integrated thruster testing, then we recommend more advanced methods to quantify cathode operational stability as described in the plasma diagnostics sections below.

B. Cathode Conditioning

Cathode conditioning is necessary for both types of emitters but is normally performed differently. The original BCA (411) impregnated inserts made from 80% dense, open pore tungsten skeletons require a degree of care in conditioning prior to activation to avoid damage to the emitter that can be permanent and render the insert unrecoverable. The worst-case issue due to excessive atmospheric exposure is resolvable by a period of 2-to-12 hours in vacuum at room temperature, which is typically accomplished as an integral part of bringing a vacuum test facility into operating condition. Stepwise heating of the cathode by the cathode heater in the established vacuum with holds at 250° and 450° C, and a final hold at 980° to 1000° C can be followed by a period with the insert at room temperature, or a transition to a suitable activation schedule involving continuing to higher temperature. Not all BaO-based emitters need this level of care, and we note that this slow conditioning process is not necessary for emitters made using metal-ceramic matrix (cermet) inserts formed from mixtures of tungsten powders and powders of barium carbonate, calcium carbonate, alumina, and scandate (Farnell 2018). Cermet inserts have been used in heaterless, instant start cathodes where no pre-conditioning processes are performed prior to ignition (Ham 2021). These emitters and ones made of LaB_6 do undergo a conditioning process, which cleans the surface of

adsorbed atmospheric constituents, but this conditioning process is performed spontaneously during the startup and discharge ignition procedure, which can involve the application of heater power for a period of 2-5 minutes before discharge ignition in cathode designs that utilize heaters.

We recommend using a gas delivery system that is configured as shown in Figure 4. The system consists of a gas bottle with its bottle valve, a regulator and its shutoff valve, flow meters for providing cathode flow and keeper flow if necessary for maintaining stability at high currents, gas flow isolators for ensuring that the cathode and keeper are isolated from the vacuum test facility ground, and a valve and pump out line to evacuate the gas delivery regions upstream of the flowmeters and enable the leak testing to be performed. Regarding leak checking, we recommend that a helium leak detector or residual gas analyzer (set to monitor helium) be used.

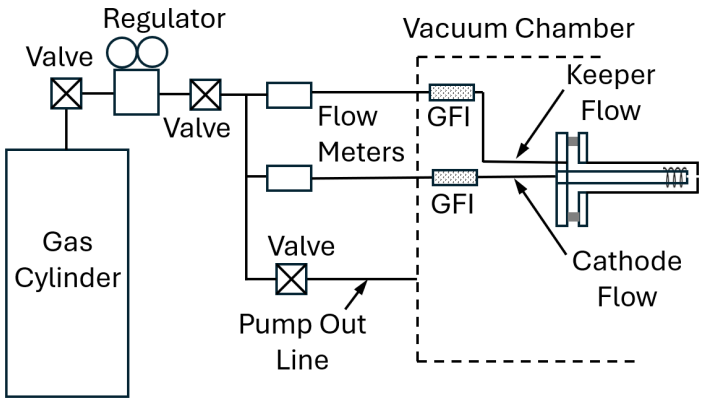

Figure 4. Gas delivery system for standalone cathode testing.

III. Recommendations for Standalone Cathode Operation

This section provides recommendations for standalone cathode testing. To begin, vacuum facility requirements such as background pressure and pumping capacity are discussed. Recommended techniques for capturing key performance metrics—such as anode current and keeper voltage behavior—are presented, along with guidance on when time-resolved versus time-averaged measurements are most appropriate. Then, best practices for mimicking the integrated thruster configuration with a standalone setup are outlined, followed by a review of diagnostic options and the data they provide.

A. Vacuum Facility

Cathodes are generally more forgiving in their vacuum facility requirements when operated in standalone configurations than when operated with their corresponding thrusters. This is for several reasons. Standalone cathodes are typically much smaller than a full integrated thruster assembly; their flow rates and power requirements are a small fraction of the main thruster discharge (often on the order of 10% or less); and although standalone cathodes can generate erosive high-energy ions, they do not generate an accelerated ion beam in the same fashion as a thruster. Together, these lessen the volume, pumping speed, and back-sputter requirements of a test facility as compared to full-up thruster testing.

Nonetheless, general best practices for electric propulsion testing vacuum facilities apply to hollow cathodes as well. The vacuum facility should be clean and have minimal impurities and should be designed with low-outgassing components. Care should be used when testing original BaO impregnated inserts, which are susceptible to impurities. In addition to a vacuum gauge, we recommend the use of a residual gas analyzer (RGA), which offers a means to characterize the off-gassing and residual constituents within a vacuum facility and perform leak checking of the gas feed system.

For standalone hollow cathode testing, vacuum facilities should achieve base pressures (i.e., pressure without propellant flow) of < 1 μTorr and be able to maintain pressures < 100 μTorr during cathode operation. Although research has shown that cathode operation is sensitive to facility operating pressure, (Hall 2021) the likely more important parameter is the neutral pressure environment nearby the cathode, which is governed more strongly by anode geometry and discharge current than solely by facility pumping speed (Mooney 2025). We note here that mechanisms such as facility ingestion of neutral gas (Frieman 2017), which affect ground measurements and operation of Hall thrusters, are not applicable to hollow cathodes.

These pressure requirements necessitate a two-stage pumping solution wherein the facility is pumped to rough vacuum (< 1 Torr) using a mechanical pump, then transitioned to a high-vacuum pumping system like, for example, a cryopump or a turbopump. The flow rates associated with full thruster testing typically drive a need for the higher pumping speed of cryogenic pumps, but for standalone cathodes—especially low-power ones—a capable turbomolecular pump may be all that is needed to maintain sufficiently low operating pressures. A gate valve between the turbomolecular pump or cryogenic pump and the vacuum chamber can be helpful in reducing time between experiments; however, care must be taken in allowing the insert material to properly cool to avoid contamination from the air before a chamber is vented. This is particularly true for the original style of BaO impregnated cathodes where the cathode might need several hours to sufficiently cool. Typically, ceramic-metal matrix and LaB6 emitters need less than one hour to cool sufficiently before venting.

Pressure at the 1 μTorr level is best measured by an ionization gauge. Given the noted lack of strong sensitivity to background pressure, there is less motivation to dictate specific pressure measurement locations or approaches like those identified as best practices for thruster testing (Dankanich 2017). Furthermore, given the typical small size of hollow cathode vacuum facilities, the location of the pressure gauge within the facility is less important. As such, it is sufficient that pressure is measured within 1 m of the cathode location. A measurement of local neutral pressure may be useful depending on the specifics of the test performed, if information about that region is desired. (Hall 2019)

For unattended operation, safety interlocks can be used to monitor operation of the vacuum facility (and the unit under test) and safely abort operation in the event of a fault or anomaly. Interlocks are also a useful mechanism to ‘safe the cathode’ in the event of a pump failure or other loss of vacuum.

Given the large range of temperatures that hollow cathodes cover naturally in their operation, approximately room temperature to upwards of 1100 − 1500 °C, depending on the emitter type, there is less need to externally drive the temperature of a standalone cathode in thermal vacuum or thermal cycling tests that are typically performed on flight HTs and GIEs. However, especially in the case of simulated worst-case cold ignitions to mimic conditions in space, there may be a desire to perform thermal vacuum testing of a cathode. In that case, means such as liquid nitrogen-cooled cold plates or other thermal control surfaces may be used. Because most cathodes are designed to limit conduction from the emitter out of the cathode (to enable stable, self-heated operation), a cold plate at the mount base of the cathode is likely not sufficient to drive the cathode temperature to the desired levels, and an additional shroud enclosing the entire hollow cathode assembly may be necessary.

B. Thruster Simulation

In general, it is desired to set up a standalone cathode test configuration so that is closely resembles the integrated thruster configuration. This ensures that the test data collected will be as relevant as possible to modelers and to EP systems providers. On the EP systems side of the equation, it is desired to demonstrate that a cathode is adequately designed to be able to drive the thruster it is intended to be used with. This is important, but we do not think rigorous qualification of a cathode can be done in a standalone configuration. With this said, we agree that cycle life and operational life can be evaluated. We recommend that cyclic testing be performed with cycle 'on' times adequate for the cathode to reach temperatures near equilibrium. The 'off' time should be long to allow the cathode to cool well below thermionic emission level (Ham 2021). Very fast cycling where the cathode is not allowed to cool can be performed, but this type of testing does not stress the cathode in a manner that cyclic operation in space would. Operational life testing performed in a standalone configuration needs to be referred to as wear testing. This is because our knowledge of standalone cathode testing is not advanced enough to certify that environmental and plasma dynamical conditions of an integrated configuration are being adequately simulated because it is considered likely that life is affected by the integrated thruster test conditions. We point out that EP qualification test recommendations and component qualification test recommendations are beyond the scope of this paper.

The paragraphs below provide more details specific to GIEs and HTs.

1. Gridded Ion Engines

We presented our recommendations for configuring a standalone cathode test for cathodes intended for use with GIEs in Section II and in Figure 2b. More elaborate configurations have been used as described by Beattie et al., 1993. They tested a 5-mm-diameter main cathode in discharge chamber simulators that replicated the actual thruster discharge chamber size, magnetic field, and anode. An electrically isolated flat plate with a hole in its center was used instead of grids at the downstream end of the discharge chamber. The only gas flow was to the cathode, and the hole in the flat plate was adjusted such that, when the plate was biased negative of the simulated discharge plasma, it collected an ion current equivalent to the beam current of their 400 W GIE.

2. Hall Thrusters

When seeking to emulate operation within a Hall thruster in standalone cathode testing, there are three major aspects of test configuration that must be considered: magnetic field, anode design, and electrical oscillations.

Magnetic Field Design. Hall thruster magnetic fields are designed to magnetize electrons in the discharge channel and not magnetize ions, and although the magnetic field is typically not oriented transverse to the cathode axis at the cathode location, it is still quite strong there in the axial direction especially for center mounted cathodes. This means that the magnetic field at the cathode is a crucial part of properly simulating operation in a Hall thruster. The magnetic field strength and topology are vastly different for centrally mounted cathodes versus externally mounted ones, but the similar considerations apply for both cases. It has been shown that the magnetic field strength applied to a cathode substantially impacts its operation and plume characteristics (Goebel 2007, Jameson 2006). In particular, we recommend that the centerline (on-axis) profile and strength of the magnetic field be created near the cathode in standalone tests. This can be accomplished with a single coaxial solenoid for centrally mounted cathodes. Better replication of the "off-axis" profile and strength of the magnetic field (through, for instance, a higher-fidelity magnetic simulator that mimics the magnetic circuit of the thruster) has been shown to have an impact on the coupling with the anode, but these effects were much smaller than the effect of simply applying the centerline magnetic field (Hall 2021), which justifies our recommendation made in Section II concerning externally mounted cathodes.

Anode Design. Coupling to the ion beam of a Hall thruster will never be fully replicated by a simple metallic anode surface held at a static DC voltage, and research has shown that the anode design impacts cathode operation, indicating that anode design can be a means to better simulate Hall thruster operation (Potrivitu 2018, Potrivitu 2019, Hall 2021, Hall 2019).

A Hall thruster is intrinsically an open system with inevitable interaction with the surrounding facility or satellite ground or space plasma (Sommerville 2007). The anode power supply in an integrated test with a thruster is operated in voltage-controlled mode, and the cathode in this configuration supplies some of its electrons to the discharge channel and more of its electrons to current neutralize the ion beam extracted from the thruster. This situation is spelled out in detail by Mazouffre et al, 2016. Unlike in the standalone configuration, the potential structure for an integrated thruster is rather complex, with large variations from inside the discharge channel, to the cathode emitter wall, and finally the far-field plume (Goebel 2008). In the integrated test case, the total cathode coupling potential, V_c, is defined by the sum between the cathode to ground potential, V_{cg}, and the plasma potential in the beam, the beam-to-ground potential, of the thruster (Goebel 2007). The parameter, V_c, defines how easily the electrons travel from the cathode emitter to the thruster and indicates the resistance of the plasma path between the two systems (Sommerville 2007).

It has been concluded that with an adequately configured anode, the anode potential measured in the standalone configuration is nearly equivalent to the cathode coupling potential, Vc, in a Hall thruster when the cathode is operated at the same emission current and flow rate (Goebel 2007). A Hall thruster equipped with a healthy, well-functioning cathode has a cathode coupling potential of 5

to 10% of the imposed anode potential. As typical Hall thrusters operate between 200 and 350 V, the cathode coupling potential is typically below 35 V. Given a typical far-field plasma potential in Hall thrusters of around 10 to 20 V, (Goebel 2008, Sommerville 2011) the magnitude of Vcg should remain below 20 V. This implies that when tested in a standalone configuration, the anode potential of the system should remain below 35 V to ensure that adequate flow is provided to the cathode.

For a given anode geometry, previous studies showed that the transition to a mode of operation with higher anode potential and more energetic plume ions is most likely an effect of the local neutral pressure in the cathode-anode gap rather than an electrostatic effect, see Figure 5 (Hall 2019). This suggests that the anode position should be correlated to its geometry to achieve a local neutral density environment in the cathode- anode gap representative to operation with the Hall thruster.

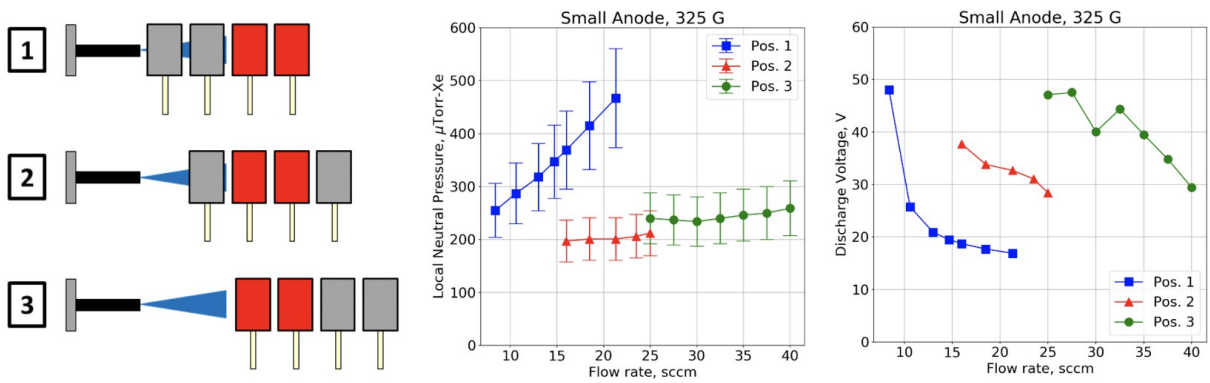

Figure 5. Experimental setup for anode position influence on anode potential with constant electrostatic cathode-anode distance. Results for local neutral pressure and anode potential as functions of anode position and cathode flow rate for a 25 A-class LaB6 cathode. Reproduced from Hall et al., IEPC-2019-299.

For integrated thruster testing, the external anode emulates the high ion density region of the thruster exit plane and its ion plume. A match in neutral density in the cathode-anode gap and electrostatic field should be achieved. Several geometries of various sizes have been used for standalone testing such as cylindrical shapes, with a bulk or perforated material, as shown in Figure 6 b-d, and plate/disk shapes with or without central or multiple openings, as shown in Figure 6 e-g. Notable, Hall et al. found that up to 50% of the anode current was collected at the farthermost electrode in a segmented cylindrical anode operating with a 20 A-class hollow cathode (Hall 2021). Therefore, as recommended in Section II, a cylindrical anode is preferred for standalone cathode testing. The anode should have sufficient length to avoid poor current attachment, and its diameter, together with the offset distance should be chosen to be representative of the local neutral density in the plasma bridge of the cathode when operating with a Hall thruster and to match the intended coupling potential.

Induced Anode Oscillations. Standalone cathode experiments are typically operated at a steady DC discharge, with the power supplies operating in current-controlled mode. When the cathode is operated in the integrated thruster configuration, particularly with an HT, the discharge current can exhibit large oscillations, often comparable in magnitude to the DC current. Recent studies have investigated the effects of inducing current oscillations onto the anode (Mooney 2025, Polk 2022). While the induced oscillations can provide similar standalone cathode performance metrics to the integrated thruster operation, the induced oscillations have less of an effect on the plume behavior near the cathode exit (Mooney 2025) nor the internal cathode temperature (Polk 2022). However, induced oscillations can affect the regions of lower plasma density, which could have implications on plasma instabilities in this region (Mooney 2025. Further studies are needed to determine whether induced oscillations can provide sufficient benefit to justify their use in standalone lifetime testing.

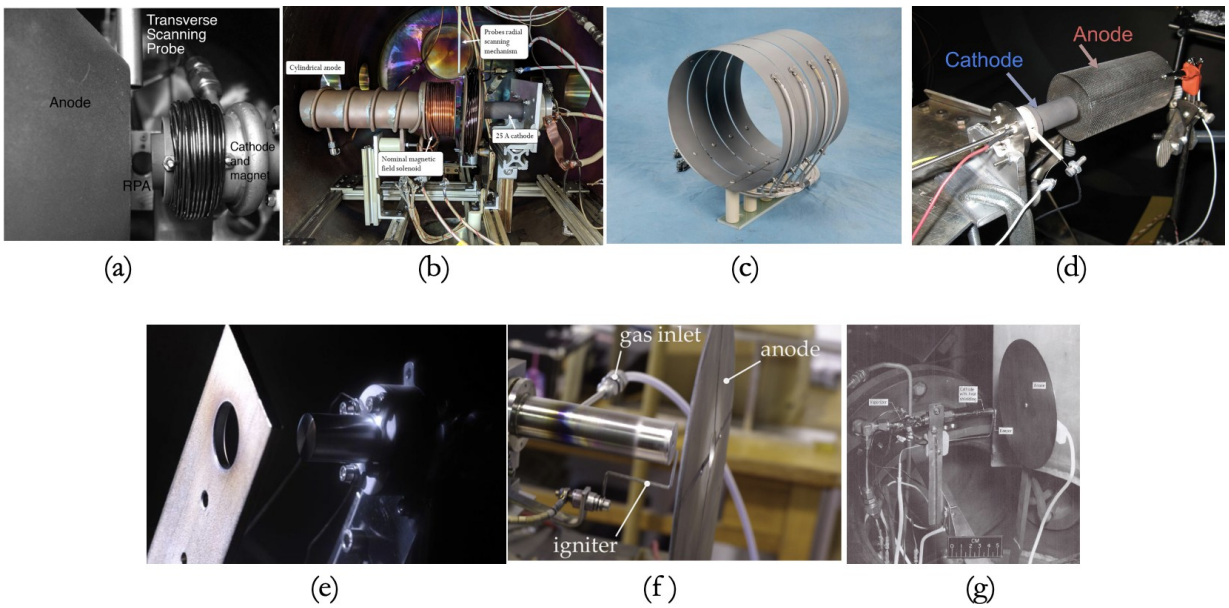

Figure 6. Various external anode geometries (a) conical-cylindrical, (b-d) cylindrical, (e-g) plate/disk. Reproduced from Goebel et al., Phys Plasmas, 2007, (Goebel 2007) Becatti et al., Plasma Sources Sci Technol, 2022, (Becatti 2022), Scott et al., IEPC-2019-299, 2019, Qin 2017, Pedrini et al., IEPC-2019-782, 2019, Joussot et al., Vacuum 146 2017, and Csiky, NASA TN D-4966, 1969.

Background vs. Local Neutral Pressures. Work by Mooney, 2025, showed that plasma behavior near the cathode, particularly the high-frequency wave energy, linked to turbulence and potential high-energy ion generation, is relatively insensitive to background pressure changes produced by varying chamber pumping speed. In contrast, cathode flow rate at a fixed discharge current has a strong influence, with flow reductions significantly enhancing high-frequency wave activity (Mooney 2025). These results suggest that high-frequency wave characteristics in the external plume are better matched between standalone and integrated thruster operation at higher background pressures combined with lower-than-nominal cathode flow rates. However, it remains unclear whether this effect is driven primarily by the local neutral pressure distribution. One possible approach to improve fidelity would be to operate at lower global background pressures while introducing neutral gas flow near the

cathode exit to better reproduce the neutral profile observed in integrated thruster tests.

C. Diagnostics

We recommend monitoring cathode performance and plasma behavior during standalone experiments. In some instances, instabilities and turbulence in the cathode–anode region or plume can produce noisy coupling with the external anode and result in the energetic ions, which in turn reduce efficiency and shorten cathode lifetime (Potrivitu 2019, Mooney 2025, Goebel 2007, Hall 2019, Georgin 2020, Tsikata 2021). Another example of a performance-limiting process is poor plasma attachment along the emitter surface, which can accelerate material degradation near the orifice. Diagnostics in standalone tests need to capture these effects. Both passive means by monitoring voltages and currents and active means through invasive and non-invasive interrogation of the cathode plasma are recommended.

Generally, the cathode plasma can be separated into two regions: the internal plasma and the external plasma. The internal plasma region incorporates the plasma internal to cathode surfaces (i.e. inside the emitter and orifice). Investigating this region is difficult due to the large densities ($> 10^{20}\mathrm{m}{-3}$) and the limited accessibility for intrusive probes. Nevertheless, investigations into this region can provide insight to plasma attachment length along the emitter surface and the temperature along the emitter surface. Moreover, the internal plasma in the emitter and orifice regions affects cathode performance and discharge stability (Goebel 2008).

Probing the cathode plume region can be less challenging than the internal emitter region, which allows consideration of accessing multiple points of the plume with different probes. Although the lower plasma density can also present a challenge in the form of low signal-to-noise ratios. Recent research trends in hollow cathodes involve multiple data acquisitions to map the cathode plume region and obtain time and spatial variation of the plasma parameters to investigate plasma oscillations and instabilities, or to validate simulations (Mooney 2025, Becatti 2022, Goebel 2023). In addition, it has become crucial to acquire data from probes placed close to the cathode axis and to the cathode exit plate, where the plasma density is high. Finally, the development of high current cathodes for space applications (up to 600 A) results in the production of dense, energetic plasma, limiting the applicability of the probes due to overheating. In this scenario, it may be necessary to develop a rapid probe positioning system for the external plume, and a data acquisition system well-synchronized with the probe movement as was done for probing the interior of hollow cathodes. Further discussion of diagnostics for passive and active monitoring is contained in Appendix C along with references on this topic.

IV. Standalone Cathode Testing Roadmap

The following roadmap provides a structured approach for executing standalone cathode experiments in support of cathode development and qualification. It is intended to guide practitioners through a sequence of phases that are built from initial ignition studies to long-term lifetime assessment and validation of physics-based models.

Phase 1: Initial Cathode Characterization

1. *Cathode–Anode Configuration.* Select an anode geometry representative of the intended thruster environment, following recommendations in Section II. For HTs, cylindrical anodes with appropriate offset are preferred; for gridded ion engines, a cylindrical chamber matched to the thruster discharge geometry is recommended.
2. *Diagnostics Selection.* Employ basic electrical diagnostics first—monitoring discharge voltage, current, keeper voltage, and oscillation spectra. Complement these with invasive and/or non-invasive probe techniques to identify plasma stability trends.
3. *Identification of Stability Regimes.* Map cathode stability as a function of discharge current and mass flow rate. Establish the boundaries where oscillation amplitudes, coupling voltage, or plume ion energy suggest transitions into unstable operation. These maps form the foundation for later life testing and model comparison.

Phase 2: Identification of Life-Limiting Behaviors

1. *Erosion Mapping.* Characterize surfaces of the orifice, keeper, and heater after extended operation using profilometry, SEM/EDS, or optical microscopy. In-situ plume diagnostics (e.g., Faraday probes, energy analyzers) can provide indications of energetic ion generation that may drive erosion.
2. *Temperature and Insert Monitoring.* Track cathode wall and insert temperatures using thermocouples, pyrometry, or IR imaging. For BaO-based cathodes, correlate temperature history with impregnate loss models; for LaB_6 cathodes, monitor for surface modification that may alter emission properties.
3. *Degradation Indicators.* Document performance shifts such as ignition delay, increased coupling voltage, or loss of stability margin, as these are often precursors to life-limiting failure modes.

Phase 3: Model Comparison and Validation

1. *Model Alignment.* Compare experimental results with predictions from 0-D, 1-D, or hybrid-PIC models if available. Parameters such as coupling voltage, plasma density, and ion energy distributions are particularly relevant.
2. *Iterative Refinement.* Use discrepancies between experimental and simulated results to refine both cathode design and model assumptions. Adjustments may include modifications to orifice geometry, insert composition, or operational envelope.
3. *Path to Qualification.* Apply validated models and experimental data to project cathode performance in integrated thruster operation and extrapolate to mission lifetimes that may be impractical to test directly on the ground.

Our roadmap emphasizes incremental fidelity, beginning with accessible electrical diagnostics, progressing through targeted lifetime evaluation, and culminating in comparisons to physics-based simulations.

V. Conclusion

Standalone hollow cathode testing provides a powerful means to characterize ignition behavior, operational stability, and life-limiting processes in environments that are simpler and more flexible than integrated thruster tests. When configured with appropriate anode geometries, representative magnetic fields, and robust diagnostics, standalone experiments can capture the essential physics that govern cathode performance. The recommended practices presented here—spanning facility requirements, apparatus configuration, diagnostics, and a stepwise testing roadmap—are intended to standardize cathode testing approaches across laboratories. Such standardization reduces variability, improves reproducibility, and strengthens the ability to compare results across facilities and cathode designs. Ultimately, the combination of carefully executed standalone tests with validated models provides a pathway to confidently extrapolate cathode performance to integrated thruster systems and mission lifetimes. This capability is critical as electric propulsion devices are scaled to higher powers and longer operating durations in support of ambitious lunar, interplanetary, and commercial spaceflight missions.

Acknowledgments

Partial support for this work was provided by NASA contract number 80NSSC21K1118 under the STRI JANUS program lead by Prof. Mitchell Walker at Georgia Tech. This support is gratefully acknowledged.

References

A

Allasio, A., et al., "GOCE Mission: Design Phases and In-Flight Experiences," *Advances in the Astronautical Sciences*, AAS 10-081, 2010.

Andreussi, T., Piragino, A., Reza, M., Giannetti, V., Farajii, F., Ferrato, E., and Andrenucci, M., "Development Status and Way Forward of SITAEL's 20-kW Class Hall Thruster, the HT20k," *Proceedings of the 36th International Electric Propulsion Conference (IEPC)*, Vienna, Austria, Sept. 2019, pp. 15–20.

Arkhipov, B. A., Maslennikov, N. A., Murashko, V. M., and Turgeneva, I. A., "Investigation of Cathode-Compensators Operating at Currents up to 50 A," *Proceedings of the 24th International Electric Propulsion Conference (IEPC-95-230)*, Moscow, Russia, 1995.

Arthur, N., Verhey, T. R., Mackey, J. A., and Soulas, G. C., "Qualification of the Flight Heaters for the NEXT-C Hollow Cathodes," NASA/TM—2020-219454, AIAA–2019–4167, NASA Glenn Research Center, 2020.

B

Balika, L., Lonchard, J.-M., Diome, M., and Duchemin, O., "Development of a Cathode for the PPS-5000 Hall Thruster Unit," *Proceedings of the 35th International Electric Propulsion Conference (IEPC-2017-416)*, Atlanta, GA, 2017.

Beall, J. M., Kim, Y. C., and Powers, E. J., "Estimation of Wavenumber and Frequency Spectra Using Fixed Probe Pairs," *Journal of Applied Physics*, Vol. 53, No. 6, 1982, pp. 3933–3940.

Beattie, J. R., Robson, R., and Williams, J. D., "Flight Qualification of an 18-mN Xenon Ion Thruster," AIAA, 1993.

Becatti, G., Pedrini, D., Kasoji, B., Paganucci, F., and Andrenucci, M., "Triple Langmuir Probes Measurements of LaB_6 Hollow Cathodes Plume," *Frontiers in Physics*, Vol. 7, 2019, p. 27.

Becatti, G., Conversano, R. W., and Goebel, D. M., "Demonstration of 25,000 Ignitions on a Proto-Flight Compact Heaterless Lanthanum Hexaboride Hollow Cathode," *Acta Astronautica*, Vol. 178, 2021, pp. 181–191.

Becatti, G., and Goebel, D. M., "500-A LaB_6 Hollow Cathode for High Power Electric Thrusters," *Vacuum*, Vol. 198, 2022, p. 110895.

Boxberger, A., Behnke, A., and Herdrich, G., "Current Advances in Optimization of Operative Regimes of Steady-State Applied-Field MPD Thrusters," *Proceedings of the 36th International Electric Propulsion Conference*, 2019, pp. 2019–585.

Brophy, J. R., and Garner, C. E., "A 5,000-Hour Xenon Hollow Cathode Life Test," *27th Joint Propulsion Conference*, AIAA 91-2122, Sacramento, CA, 1991.

Brophy, J. R., Brinza, D., Polk, J., and Henry, M., "The DS1 Hyper-Extended Mission," *Proceedings of the 2002 Joint Propulsion Conference*, AIAA 2002-3673, Indianapolis, IN, 2002.

Byers, D. C., Kerslake, W. R., and Staggs, J. F., "SERT II—Mission and Experiments," *Journal of Spacecraft and Rockets*, Vol. 7, No. 1, 1970, pp. 4–6.

Byers, D. C., and Snyder, A., "Parametric Investigation of Mercury Hollow-Cathode Neutralizers," NASA TN D-5861, 1970.

Byers, D. C., and Dankanich, J. W., "Geosynchronous-Earth-Orbit Communication Satellite Deliveries with Integrated Electric Propulsion," *Journal of Propulsion and Power*, Vol. 24, No. 6, 2008, pp. 1369–1375.

C

Capacci, M., Marcuccio, S., and Genovese, A., "Simple Numerical Model Describing Discharge Parameters in Orificed Hollow Cathode Devices," *AIAA Paper 97-2791*, 1997.

Coletti, M., "A Model of Barium Depletion in Hollow Cathode Inserts," *Journal of Propulsion and Power*, Vol. 24, No. 4, 2008, pp. 873–879. https://doi.org/10.2514/1.35010.

Coletti, M., "Numerical Investigation of Lifetime in Barium Oxide Hollow Cathodes," *Proceedings of the 31st International Electric Propulsion Conference (IEPC-2009-193)*, Ann Arbor, MI, 2009.

Conversano, R. W., et al., "Demonstration of 13,011-h of Operation of a Proto-Flight Compact Heaterless Lanthanum Hexaboride Hollow Cathode," *Acta Astronautica*, Vol. 197, 2022, pp. 53–59.

Csiky, G. A., "Measurements of Some Properties of a Discharge from a Hollow Cathode," NASA Technical Note D-4966, 1969.

D

Dankanich, J. W., Walker, M., Swiatek, M. W., and Yim, J. T., "Recommended Practice for Pressure Measurement and Calculation of Effective Pumping Speed in Electric Propulsion Testing," *Journal of Propulsion and Power*, Vol. 33, No. 3, 2017, pp. 668–680.

Daykin-Iliopoulos, A., Golosnoy, I., Gabriel, S., and Bosi, F., "Characterisation of a 30 A Heaterless Hollow Cathode," *Proceedings of the 36th International Electric Propulsion Conference (IEPC-2019-802)*, Vienna, Austria, 2019.

Daykin-Iliopoulos, A., Golosnoy, I., Gabriel, S., and Bosi, F., "Spectroscopic Investigation of the Steady State Characteristics of Hollow Cathode Internal Plasmas," *Proceedings of the 29th International Electric Propulsion Conference (IEPC-2005-287)*, Princeton, NJ, 2005.

Dodson, C., Jorns, B., and Wirz, R., "Measurements of Ion Velocity and Wave Propagation in a Hollow Cathode Plume," *Plasma Sources Science and Technology*, Vol. 28, 2019, p. 065009.

Dodson, C., *Ion Energy and Wave Propagation in a Hollow Cathode Plume*, Ph.D. Thesis, University of California, 2018.

Domonkos, M. T., Patterson, M. J., and Gallimore, A. D., "Low-Current, Xenon Orificed Hollow Cathode Performance for In-Space Applications," *Journal of Propulsion and Power*, Vol. 19, No. 3, 2003, pp. 438–443.

Domonkos, M. T., Katz, I., Mandell, M. J., Goebel, D. M., and Patterson, M. J., "A Particle and Energy Balance Model of the Orificed Hollow Cathode," *AIAA Paper 2002-4240*, 2002.

Domonkos, M. T., Gallimore, A. D., and Patterson, M. J., "Thermographic Investigation of 3.2 mm Diameter Orificed Hollow Cathodes," *34th AIAA/SAE/ASEE Joint Propulsion Conference*, AIAA Paper 1998-3793, Cleveland, OH, 1998.

Domonkos, M. T., *Evaluation of Low-Current, Orificed Hollow Cathodes*, Ph.D. Thesis, University of Michigan, Ann Arbor, MI, 1999.

Dressman, L., et al., "The Tri-Service-NASA Cathode Life Test Facility 2002 Annual Report," Tech. Rep., Crane Division, Naval Surface Warfare Center, March 2002.

F

Farnell, C. C., Farnell, C. C., Williams, J. D., Williams, D. D., Nguyen, B. G., Greiner, K. E., and Ham, R. K., "Simplified Formation Process of a Low Work Function Insert," U.S. Patent 10,002,738, 2018.

Farnell, C., Williams, J., and Farnell, C., "Comparison of Hollow Cathode Discharge Plasma Configurations," *Plasma Sources Science and Technology*, 2011.

Forman, R., and Smith, D. H., "Thermionic Cathode Life-Test Studies," *IEEE Transactions on Electron Devices*, Vol. ED-26, No. 10, 1979, pp. 1567–1572.

Frieman, J. D., Kamhawi, H., Mackey, J., Peterson, P. Y., Gilland, J. H., Hofer, R., and Welander, B., "Extended Wear Testing of the 12-kW Advanced Electric Propulsion System Engineering Test Unit Hall Thruster," *Proceedings of the 37th International Electric Propulsion Conference*, June 2022.

Frieman, J. D., Liu, T. M., and Walker, M. L., "Background Flow Model of Hall Thruster Neutral Ingestion," *Journal of Propulsion and Power*, Vol. 33, No. 5, 2017, pp. 1087–1101.

G

Georgin, M. P., *Ionization Instability of the Hollow Cathode Plume*, Ph.D. Thesis, University of Michigan, MI, USA, 2020.

Ghislanzoni, L., Benetti, L., Misuri, T., Cesaretti, G., and Fontani, L., "Hall Effect Thruster Direct Drive PPUs: Experimental Investigation of the Cathode Potential Grounding Problem," *E3S Web of Conferences*, Vol. 16, 2016, p. 15002.

Goebel, D. M., Katz, I., and Mikellides, I. G., *Fundamentals of Electric Propulsion*, John Wiley & Sons, 2023.

Goebel, D. M., and Katz, I., *Fundamentals of Electric Propulsion: Ion and Hall Thrusters*, JPL Space Science and Technology Series, Wiley, Hoboken, NJ, 2008.

Goebel, D. M., Becatti, G., Mikellides, I. G., and Ortega, A. L., "Plasma Hollow Cathodes," *Journal of Applied Physics*, Vol. 130, No. 5, 2021.

Goebel, D. M., Crow, J. T., and Forrester, A. T., "Lanthanum Hexaboride Hollow Cathode for Dense Plasma Production," *Review of Scientific Instruments*, Vol. 49, 1978, pp. 469–472.

Goebel, D. M., Polk, J. E., and Ho, A. K., "Lanthanum Hexaboride Hollow Cathode Performance and Wear Testing for the Asteroid Redirect Mission Hall Thruster," *52nd AIAA/SAE/ASEE Joint Propulsion Conference*, AIAA 2016-4835, 2016.

Goebel, D. M., Watkins, R. M., and Jameson, K. K., "LaB_6 Hollow Cathodes for Ion and Hall Thrusters," *Journal of Propulsion and Power*, Vol. 23, No. 3, 2007, pp. 552–558.

Goebel, D. M., Watkins, R. M., Jameson, K. K., Katz, I., and Mikellides, I. G., "Hollow Cathode Theory and Experiment. Part I: Plasma Characterization Using Fast Miniature Scanning Probes," *Journal of Applied Physics*, Vol. 98, No. 11, 2005, pp. 1–9.

Goebel, D. M., and Watkins, R. M., "Compact Lanthanum Hexaboride Hollow Cathode," *Review of Scientific Instruments*, Vol. 81, No. 8, 2010, p. 083504.

H

Hall, S. J., Gray, T. G., Yim, J. T., Choi, M., Sarver-Verhey, T. R., and Kamhawi, H., "The Effect of Facility Background Pressure on Hollow Cathode Operation," *Journal of Applied Physics*, Vol. 130, No. 11, 2021, p. 113302.

Hall, S. J., Jorns, B. A., Cusson, S. E., Gallimore, A. D., Kamhawi, H., Peterson, P. Y., and Gilland, J. H., "Performance and High-Speed Characterization of a 100-kW Nested Hall Thruster," *Journal of Propulsion and Power*, Vol. 38, No. 1, 2022, pp. 40–50.

Hall, S. J., Gray, T. G., Yim, J. T., Choi, M., Mooney, M. M., Sarver-Verhey, T. R., and Kamhawi, H., "The Effect of Anode Position on Operation of a 25-A Class Hollow Cathode," *36th International Electric Propulsion Conference*, IEPC-2019-299, Vienna, Austria, 2019.

Ham, R. K., Williams, J. D., Thompson, S. J., and Farnell, S. C., "A Low Erosion Instant Start Ignition Process for Heaterless Hollow Cathodes," *AIAA Propulsion and Energy Forum*, 2021.

Hruby, P., et al., "Overview of Busek Electric Propulsion," *36th International Electric Propulsion Conference (IEPC-2019-926)*, Vienna, Austria, 2019.

Hutchinson, I. H., "Principles of Plasma Diagnostics," *Plasma Physics and Controlled Fusion*, Vol. 44, No. 12, 2002, p. 2603.

J

Jameson, K., Goebel, D., Mikellides, I., and Watkins, R., "Local Neutral Density and Plasma Parameter Measurements in a Hollow Cathode Plume," *42nd AIAA/SAE/ASEE Joint Propulsion Conference*, AIAA Paper 2006-4490, Sacramento, CA, 2006.

Jorns, B. A., Mikellides, I. G., and Goebel, D. M., "Ion Acoustic Turbulence in a 100-A LaB_6 Hollow Cathode," *Physical Review E*, Vol. 96, 2017, p. 023208.

Joussot, R., Grimaud, L., and Mazouffre, S., "Examination of a 5-A Class Cathode with a LaB_6 Flat Disk Emitter in the 2–20 A Current Range," *Vacuum*, Vol. 146, 2017, pp. 52–62.

K

Kanarov, V., et al., "High Resolution Energy Analyzer for Broad Ion Beam Characterization," *Review of Scientific Instruments*, Vol. 79, No. 9, 2008, p. 093304.

Karabadzhak, G., Chiu, Y. H., and Dressler, R., "Passive Optical Diagnostic of Xe-Propelled Hall Thrusters. II. Collisional Radiative Model," *Journal of Applied Physics*, Vol. 99, 2006, p. 113305.

Katz, I., Gardner, B. M., and Mandell, M. J., "Model of Plasma Contactor Performance," *Journal of Spacecraft and Rockets*, Vol. 34, No. 6, 1997, pp. 824–828. https://doi.org/10.2514/2.3298

Katz, I., Mandell, M. J., Patterson, M. J., and Domonkos, M. T., "Sensitivity of Hollow Cathode Performance to Design and Operating Parameters," *AIAA Paper 99-2576*, 1999.

Katz, I., Anderson, J. R., Polk, J. E., and Brophy, J. R., "One-Dimensional Hollow Cathode Model," *Journal of Propulsion and Power*, Vol. 19, No. 4, 2003, pp. 595–600. https://doi.org/10.2514/2.6147

Kubota, K., Oshio, Y., Watanabe, H., Cho, S., Okuno, Y., and Funaki, I., "Comparisons Between Hybrid-PIC Simulation and Plume Plasma Measurements of LaB_6 Hollow Cathode," *Proceedings of the 36th International Electric Propulsion Conference (IEPC-2019-865)*, Vienna, Austria, 2019.

Kovaleski, S. D., Patterson, M. J., Soulas, G. C., and Sarver-Verhey, T. R., "A Review of Testing of Hollow Cathodes for the International Space Station Plasma Contactor," NASA/TM-2001-211291, IEPC-01-271, NASA Glenn Research Center, 2001.

L

Lafferty, J., "Boride Cathodes," *Journal of Applied Physics*, Vol. 22, No. 3, 1951, pp. 299–309.

Lev, D., et al., "Low Current Heaterless Hollow Cathode Neutralizer for Plasma Propulsion—Development Overview," *Review of Scientific Instruments*, Vol. 90, No. 11, 2019, p. 113303.

Lev, D., et al., "Cathode Test Facility at Rafael," *Space Propulsion 2016*, Rome, Italy, 2016, Paper SP2016-3125365.

Lev, D. R., Mikellides, I. G., Pedrini, D., Goebel, D. M., Jorns, B. A., and McDonald, M. S., "Recent Progress in Research and Development of Hollow Cathodes for Electric Propulsion," *Reviews of Modern Plasma Physics*, Vol. 3, No. 1, 2019.

Levko, D., Krasik, Y. E., Vekselman, V., and Haber, I., "Two-Dimensional Model of Orificed Micro-Hollow Cathode Discharge for Space Application," *Physics of Plasmas*, Vol. 20, No. 8, 2013, Art. 083512. https://doi.org/10.1063/1.4818969

Liu, H., Li, M., Ning, Z., Ren, J., Tang, H., Yu, D., et al., "2-D Modeling of Orificed Hollow Cathodes of Stationary Plasma Thrusters SPT-100," *IEEE Transactions on Plasma Science*, Vol. 43, No. 12, Dec. 2015, pp. 4024–4033. https://doi.org/10.1109/TPS.2015.2457677

López Ortega, A., Jorns, B. A., and Mikellides, I. G., "Hollow Cathode Simulations with a First-Principles Model of Ion-Acoustic Anomalous Resistivity," *Journal of Propulsion and Power*, Vol. 34, No. 4, 2018, pp. 1026–1037. https://doi.org/10.2514/1.B36782

M

Mackey, J. A., Shastry, R., and Soulas, G. C., "Characterization of the NEXT Hollow Cathode Inserts After Long-Duration Testing," 2017.

Malik, A., Montarde, P., and Haines, M., "Spectroscopic Measurements on Xenon Plasma in a Hollow Cathode," *Journal of Physics D: Applied Physics*, Vol. 33, 2000, pp. 2037–2048.

Manoudis, A. N., "Conceptual Study of a Low Power Electric Propulsion System for LEO and VLEO Microsatellite Missions," Master's Thesis, National and Kapodistrian University of Athens, June 2022.

Martelli, R., Thompson, S., Farnell, C., Farnell, C., and Williams, J. D., "Characterization of a 600-A Barium Oxide-Based [Cathode]," *Proceedings of the International Electric Propulsion Conference (IEPC-2025)*, London, UK, 2025.

Mazouffre, S., "Laser-Induced Fluorescence Diagnostics of the Cross-Field Discharge of Hall Thrusters," *Plasma Sources Science and Technology*, Vol. 22, 2013, p. 013001.

Mazouffre, S., "Electric Propulsion for Satellites and Spacecraft: Established Technologies and Novel Approaches," *Plasma Sources Science and Technology*, Vol. 25, 2016, p. 033002.

Mazouffre, S., Joussot, R., and Vincent, B., "Discharge and Plume Characterization of a 100-A Class Lanthanum Hexaboride Hollow Cathode," *Journal of Applied Physics*, Vol. 130, No. 17, 2021.

Mikellides, I. G., Katz, I., Goebel, D. M., and Polk, J. E., "Hollow Cathode Theory and Experiment. Part II: A Two-Dimensional Theoretical Model of the Emitter Region," *Journal of Applied Physics*, Vol. 98, No. 11, 2005, p. 113303.

Mikellides, I. G., Guerrero, P., Lopez Ortega, A., and Polk, J. E., "Spot-to-Plume Mode Transition Investigations in the HERMeS Hollow Cathode Discharge Using Coupled 2-D Axisymmetric Plasma–Thermal Simulations," *Proceedings of the 2018 Joint Propulsion Conference*, Cincinnati, OH, AIAA Paper 2018-4722, July 2018. https://doi.org/10.2514/6.2018-4722

Mikellides, I. G., Goebel, D. M., Jorns, B. A., Polk, J. E., and Guerrero, P., "Numerical Simulations of the Partially-Ionized Gas in a 100-A LaB_6 Hollow Cathode," *IEEE Transactions on Plasma Science*, Vol. 43, No. 1, 2015, pp. 173–184. https://doi.org/10.1109/TPS.2014.2320876

Mikellides, I. G., Ortega, A. L., Goebel, D. M., and Becatti, G., "Dynamics of a Hollow Cathode Discharge in the Frequency Range of 1–500 kHz," *Plasma Sources Science and Technology*, Vol. 29, No. 3, 2020, p. 035003.

Mizrahi, J., Vekselman, V., Gurovich, V., and Krasik, Y., "Simulation of Plasma Parameters During Hollow Cathode Operation," *Journal of Propulsion and Power*, Vol. 29, No. 5, 2013, pp. 1154–1161. https://doi.org/10.2514/1.B34805

Mooney, M. M., *Turbulence and Energetic Ion Production in the Partially Magnetized Hollow Cathode Plume*, Ph.D. Dissertation, Western Michigan University, 2025.

O

Ohkawa, Y., et al., "Observation and Analysis of Graphite Hollow Cathode After 45,000-Hour Life Test," *Proceedings of the 33rd International Electric Propulsion Conference (IEPC-2013-364)*, Washington, D.C., 2013.

Ortega, A. L., Mikellides, I. G., and Goebel, D. M., "Numerical Simulations for Life Assessments of the BaO and LaB_6 Cathode Options in the Hall Effect Rocket with Magnetic Shielding (HERMeS)," *Proceedings of the 35th International Electric Propulsion Conference (IEPC-2017)*, Atlanta, GA, 2017.

P

Parakhin, G. A., and Murashko, V. M., "Development of Hollow Cathodes for Electric Propulsion Devices," *Proceedings of the 31st International Electric Propulsion Conference (IEPC-2009-170)*, Ann Arbor, MI, 2009.

Parra, F. I., Ahedo, E., and Merino, M., "A One-Dimensional Model of a Plasma Flow in a Hollow Cathode," *Physics of Plasmas*, Vol. 13, No. 11, 2006, Art. 113503. https://doi.org/10.1063/1.2364840

Pedrini, D., Albertoni, R., Paganucci, F., and Andrenucci, M., "Modeling of LaB_6 Hollow Cathode Performance and Lifetime," *Acta Astronautica*, 2015.

Pedrini, D., Mazouffre, S., and Roussel, J.-F., "Reduced-Order Model for LaB_6 Hollow Cathodes Aimed at Performance and Lifetime Assessment," *Acta Astronautica*, Vol. 106, 2015, pp. 170–181. https://doi.org/10.1016/j.actaastro

Polk, J., Goodfellow, K., "High Current Cathode Thermal Behavior, Part II: Experiments," *24th International Electric Propulsion Conference (IEPC-1993-029)*, Moscow, Russia, 1993.

Polk, J. E., Goebel, D. M., and Guerrero, P., "Thermal Characteristics of Lanthanum Hexaboride Hollow Cathodes," *Proceedings of the 34th International Electric Propulsion Conference (IEPC-2015-044)*, Kobe, Japan, 2015.

Polk, J. E., Lobbia, R. B., "The Effect of Time-Varying Currents on Hollow Cathode Operation," *37th International Electric Propulsion Conference (IEPC-2022-146)*, Boston, MA, June 2022.

Polk, J. E., Marrese-Reading, C., Thornber, B., Dang, L., Johnson, L., and Katz, I., "Scanning Optical Pyrometer for Measuring Temperatures in Hollow Cathodes," *Review of Scientific Instruments*, Vol. 78, 2007, p. 093101.

Polk, J. E., et al., "Ongoing Wear Test of a XIPS 25-cm Thruster Discharge Cathode," *44th AIAA/ASME/SAE/ASEE Joint Propulsion Conference & Exhibit*, AIAA 2008-4913, Hartford, CT, 2008.

Polk, J. E., Watkins, R. M., Jameson, K. K., and Yoneshige, L., "Characterization of Hollow Cathode Performance and Thermal Behavior," *42nd Joint Propulsion Conference*, AIAA, 2012.

Potrivitu, G.-C., Joussot, R., and Mazouffre, S., "Anode Position Influence on Discharge Modes of a LaB_6 Cathode in Diode Configuration," *Vacuum*, Vol. 151, 2018, pp. 122–132.

Potrivitu, G.-C., Mazouffre, S., Grimaud, L., and Joussot, R., "Anode Geometry Influence on LaB_6 Cathode Discharge Characteristics," *Physics of Plasmas*, Vol. 26, 2019, p. 113506.

Potrivitu, G.-C., Xu, L., Huang, S., Rohaizat, M., and Xu, S., "Discharge Mode Transition in a Krypton-Fed 1-A Class LaB_6 Cathode for Low-Power Hall Thrusters for Small Satellites," *Journal of Applied Physics*, Vol. 127, 2019, p. 064501.

Potrivitu, G.-C., and Xu, S., "Phenomenological Plasma Model for Open-End Emitter with Orificed Keeper Hollow Cathodes," *Acta Astronautica*, Vol. 191, 2022, pp. 293–316.

Prioul, M., Mazouffre, S., Cannat, F., and Boniface, C., "PPS®1350-G Qualification Status for Alphabus," *43rd AIAA/ASME/SAE/ASEE Joint Propulsion Conference*, AIAA Paper 2007-5197, Cincinnati, OH, 2007.

Qiao, C., et al., "Hollow Cathode Life Test for the 80-mN Hall Thruster," *Proceedings of the 33rd International Electric Propulsion Conference (IEPC-2013-60)*, Washington, D.C., 2013.

Qin, Y., Xie, K., Guo, N., Zhang, Z., Zhang, C., Gu, Z., Jiang, Z., and Ouyang, J., "The Analysis of High Amplitude of Potential Oscillations Near the Hollow Cathode of Ion Thruster," *Acta Astronautica*, Vol. 134, 2017, pp. 265–277.

R

Rajput, R., Khaustova, A., and Loyan, A., "Development of Xenon Collisional Radiative Model for Plasma Diagnostics of Hall Effect Thrusters," *Eastern-European Journal of Enterprise Technologies*, Vol. 86, 2017, pp. 2/8.

Rawlin, V. K., and Kerslake, W. R., "Durability of the Hollow Cathode and Future Applications," NASA TM X-52372, 1970.

Roberts, P., Brown, Z., and Jorns, B., "Hollow Cathode Electron Properties Are Consistent with Marginally Stable Turbulence," *Applied Physics Letters*, Vol. 126, 2025, p. 074103.

S

Salhi, A., and Turchi, P. J., "A First-Principles Model for Orificed Hollow Cathode Operation," *AIAA Paper 92-3742*, 1992.

Sarver-Verhey, T. R., "28,000 Hour Xenon Hollow Cathode Life Test Results," *25th International Electric Propulsion Conference*, Cleveland, OH, 1997.

Sarver-Verhey, T. R., "Destructive Evaluation of a Xenon Hollow Cathode After a 28,000 Hour Life Test," *34th AIAA/ASME/SAE/ASEE Joint Propulsion Conference and Exhibit*, Cleveland, OH, 1998.

Sarver-Verhey, T. R., "Scenario for Hollow Cathode End-of-Life," *26th International Electric Propulsion Conference*, NASA/CR-2000-209420, 2000.

Sarver-Verhey, T. R., Soulas, G. C., and Mackey, J., "Heater Validation for the NEXT-C Hollow Cathodes," *35th International Electric Propulsion Conference (IEPC-2017-397)*, Atlanta, GA, 2017.

Sarver-Verhey, T. R., Kamhawi, H., Goebel, D. M., Polk, J. E., Peterson, P. Y., and Robinson, D. A., "Hollow Cathode Assembly Development for the HERMeS Hall Thruster," *52nd Joint Propulsion Conference*, Salt Lake City, UT, 2016.

Sary, G., Garrigues, L., and Boeuf, J.-P., "Hollow Cathode Modeling: I. A Coupled Plasma Thermal Two-Dimensional Model," *Plasma Sources Science and Technology*, Vol. 26, No. 5, 2017, Art. 055007. https://doi.org/10.1088/1361-6595/aa6217

Sary, G., Garrigues, L., and Boeuf, J.-P., "Hollow Cathode Modeling: II. Physical Analysis and Parametric Study," *Plasma Sources Science and Technology*, Vol. 26, No. 5, 2017, Art. 055008.

Semenkin, A. V., and Kim, V., "Electric Propulsion Activity in Russia," *Proceedings of the 27th International Electric Propulsion Conference (IEPC-2001-003)*, Pasadena, CA, 2001.

Sheehan, J. P., et al., "Recommended Practice for Use of Emissive Probes in Electric Propulsion Testing," *Journal of Propulsion and Power*, Vol. 33, No. 3, 2017, pp. 614–637.

Siegfried, D. E., and Wilbur, P. J., "A Model for Mercury Orificed Hollow Cathodes—Theory and Experiment," *AIAA Journal*, Vol. 22, No. 10, 1984, pp. 1405–1412. https://doi.org/10.2514/3.48743

Sommerville, J., and King, L., "Effect of Cathode Position on Hall-Effect Thruster Performance and Cathode Coupling Voltage," *43rd AIAA/ASME/SAE/ASEE Joint Propulsion Conference Exhibit*, AIAA 2007-5174, Cincinnati, OH, 2007.

Sommerville, J., and King, L., "Hall-Effect Thruster–Cathode Coupling, Part II: Ion Beam and Near-Field Plume," *Journal of Propulsion and Power*, Vol. 27, 2011, pp. 754–767.

Soulas, G. C., "Status of Hollow Cathode Heater Development for the Space Station Plasma Contactor," NASA Contractor Report 195364, AIAA-94-3309, NASA Lewis Research Center, 1994.

T

Taccogna, F., Minelli, P., Cavenago, M., Garulli, I., and Longo, S., "Self-Consistent One-Dimensional Hybrid Model of an Orificed Hollow Cathode," *IEEE Transactions on Plasma Science*, Vol. 43, No. 1, 2015, pp. 98–106. https://doi.org/10.1109/TPS.2014.2362236

Taunay, P.-Y. C. R., Wordingham, C. J., and Choueiri, E. Y., "A 0-D Model for Orificed Hollow Cathodes with Application to the Scaling of Total Pressure," *AIAA Paper 2019-4246*, 2019.

Taunay, P.-Y. C. R., Wordingham, C. J., and Choueiri, E. Y., "Physics of Thermionic, Orificed Hollow Cathodes. Part 1: Theory," *Plasma Sources Science and Technology*, Vol. 31, No. 2, 2022, Art. 025017. https://doi.org/10.1088/1361-6595/ac4f77

Taunay, P.-Y. C. R., *Scaling Laws in Orificed Thermionic Hollow Cathodes*, Ph.D. Thesis, Princeton University, Princeton, NJ, 2020.

Thomas, R. E., Kamhawi, H., and Williams, G. J., "High Current Cathode Plasma Plume Measurements," *33rd International Electric Propulsion Conference (IEPC-2013-076)*, Washington, D.C., 2013.

Tilley, D., de Grys, K., and Myers, R., "Hall Thruster–Cathode Coupling," *35th AIAA/ASME/SAE/ASEE Joint Propulsion Conference Exhibit*, AIAA 99-2865, Los Angeles, CA, 1999.

Tilley, D. L., et al., "Flight Hollow Cathode for Hall Thruster Applications," *34th Joint Propulsion Conference and Exhibit*, AIAA 98-3339, 1998.

Tsai, C. C., Menon, M. M., Ryan, P. M., Schechter, D. E., Stirling, W. L., and Haselton, H. H., "Long-Pulse Ion Source for Neutral-Beam Applications," *Review of Scientific Instruments*, Vol. 53, 1982, p. 417.

Tsikata, S., Minea, T., "Modulated Electron Cyclotron Drift Instability in a High-Power Pulsed Magnetron Discharge," *Physical Review Letters*, Vol. 14, 2015, p. 185001.

Tsikata, S., Lemoine, N., Pisarev, V., and Grésillon, D., "Dispersion Relations of Electron Density Fluctuations in a Hall Thruster, Observed by Collective Light Scattering," *Plasma Science and Technology*, Vol. 16, 2009, p. 033506.

Tsikata, S., Mazouffre, S., and Grimaud, L., "Electron Properties in a High-Current LaB_6 Hollow Cathode Plasma Using Thomson Scattering," *Journal of Physics D: Applied Physics*, Vol. 53, No. 41, 2020.

Tsikata, S., Hara, K., and Mazouffre, S., "Characterization of Hollow Cathode Plasma Turbulence Using Coherent Thomson Scattering," *Journal of Applied Physics*, Vol. 130, 2021, p. 243304.

V

Vaughn, J., Schneider, T., Polk, J., Goebel, D., Ohlinger, W., and Hill, D., "NEXIS Reservoir Cathode 2000 Hour Life Proof-of-Concept Test," *40th AIAA/ASME/SAE/ASEE Joint Propulsion Conference and Exhibit*, Fort Lauderdale, FL, 2004.

Vincent, B., Tsikata, S., Potrivitu, G.-C., and Mazouffre, S., "Incoherent Thomson Scattering Diagnostic Development for Plasma Propulsion Investigations," *35th International Electric Propulsion Conference (IEPC-2017-442)*, Atlanta, GA, 2017.

Vincent, B., Tsikata, S., Potrivitu, G.-C., Sary, G., Garrigues, L., and Mazouffre, S., "Electron Properties of an Emissive Cathode: Analysis with Incoherent Thomson Scattering, Fluid Simulations, and Langmuir Probe Measurements," *Journal of Physics D: Applied Physics*, Vol. 53, 2020, p. 415202.

W

Washeleski, R., Meyer, E., and King, L., "Application of Maximum Likelihood Methods to Laser Thomson Scattering Measurements of Low Density Plasmas," *Review of Scientific Instruments*, Vol. 84, 2013, p. 105101.

Williams, G. J., Smith, T., Domonkos, M., Gallimore, A., and Drake, R., "Laser-Induced Fluorescence Characterization of Ions Emitted from Hollow Cathodes," *IEEE Transactions on Plasma Science*, Vol. 28, 2000, pp. 1664–1675.

Wiese, W., "Spectroscopic Diagnostics of Low Temperature Plasmas: Techniques and Required Data," *Spectrochimica Acta*, Vol. 46B, 1991, pp. 831–841.

Wordingham, C. J., Taunay, P.-Y. C. R., and Choueiri, E. Y., "A Critical Review of Orificed Hollow Cathode Modeling: 0-D Models," *AIAA Paper 2017-4888*, 2017.

Y

Yamamoto, N., Tomita, K., Yamasaki, N., Tsuru, T., Ezaki, T., Kotani, Y., Uchino, K., and Nakashima, H., "Measurements of Electron Density and Temperature in a Miniature Microwave Discharge Ion Thruster Using Laser Thomson Scattering Technique," *Plasma Sources Science and Technology*, Vol. 19, 2010, p. 045009.

Z

Zakany, J. S., and Pinero, L. R., "Space Station Cathode Ignition Test Status at 32,000 Cycles," *25th International Electric Propulsion Conference*, Cleveland, OH, 1997.

Zhang, Z., Xie, K., Wang, H., Tan, C., and Ouyang, J., "Beam Plasma Characteristics of a Helicon Plasma Source Measured by a Spatially Resolved Optical Emission Spectroscope," *IEEE Transactions on Plasma Science*, Vol. 8, 2020, pp. 2487–2494.

Zhu, X., and Pu, Y., "Determination of Non-Maxwellian Electron Energy Distributions in Low-Pressure Plasmas by Using the Optical Emission Spectroscopy and a Collisional-Radiative Model," *Plasma Science and Technology*, Vol. 13, 2011, p. 3.

Zurbach, S., Cornu, N., and Lasgorceix, P., "Performance Evaluation of a 20-kW Hall Effect Thruster," *Proceedings of the International Electric Propulsion Conference*, Kurhaus, Wiesbaden, Germany, 2011, p. 33.

Appendix A

This appendix discusses discharge current regimes of cathodes and provides a more detailed overview of the anode configurations used for standalone tests than was provided in Sections II and III.

A. Cathode Current Regimes

Hollow cathodes have been operated over electron emission currents ranging from 0.1 A to 1000 A. Below we divide cathodes into low, mid, and high current ranges.

1. *Low-current (0.1-5 A)*

Cathodes in the low-current range (0.1-5A) are in the class studied first because of the limited power available to early EP propulsion systems. In these early systems, mercury propellant was used in cathodes with BaO-based inserts (Byers 1970,) using materials that are essentially unchanged from modern cathodes. The development of 3 mm and 5 mm diameter hollow cathodes for the neutralizer and main cathodes, respectively, of a 400 W GIE operated on Xe propellant started in the early 1990's (Beattie, 1993). These cathodes operated in the 1 A and 4 A range of emission current, respectively. Standalone tests of the 5 mm cathode were performed in discharge chamber simulators that replicated the actual thruster discharge chamber size, magnetic field, and anode. Following the Hg and early Xe work, Domonkos et al. advanced work on low-current hollow cathodes in the ~3 mm diameter class by conducting standalone and integrated testing and developing models of the hollow cathode operation that were later expanded upon by many others (Domonkos 1999, Domonkos 2003). More recently a great deal of interest has resurfaced in low current hollow cathodes due to the development of sub-kilowatt HT systems used on LEO spacecraft that are part of large constellations of satellites. Some of this work has been done with heaterless, instant start hollow cathodes in the 3 mm diameter class (Ham 2021).

2. *Mid-current (5-50A)*

Cathodes in the mid-current range are used in HTs and GIEs operating in the 1-30 kW power range and correspond to the largest body of knowledge of ground characterization and flight heritage. Part of this body of knowledge was derived from an effort at NASA to characterize the cathodes used in the NSTAR GIE, which operated between 10-25 A. This effort included standalone cathode testing and simulation campaigns (Mikellides 2005, Goebel 2005).

Other US cathodes in this current range include the NEXT ion thruster main cathode, (Mackey 2017, Sarver-Verhey 2017), the NEXIS ion thruster cathode (Vaughn 2004), both cathode variants for the HERMeS Hall Thruster (Sarver-Verhey 2016, Ortega 2017), and the cathodes for the H6 Hall thruster (Goebel 2007, Goebel 2010). Although the International Space Station Plasma Contactor is not an electric propulsion device, it contains a BaO-based hollow cathode that was studied during its development (Zakany 1997, Server-Verhey 1997, 1998, and 1999) and it forms the basis of several subsequent generations of NASA hollow cathodes, specifically the NSTAR GIE main discharge and neutralizer cathodes. Much of our collective understanding of the operation and capabilities of hollow cathodes comes from development of cathodes in this current class, which we point out were all tested in standalone test configurations during their development programs.

A comparable amount of work has also been performed outside the US on mid-current hollow cathodes. In France, Safran Aircraft Engines developed and qualified a dedicated LaB_6 hollow cathode for the PPS-5000 Hall thruster, covering 5–20 A with more than 15,000 h of demonstrated lifetime capability in a standalone configuration (Balika 2017). This effort combined coupled thermal–fluid–plasma modeling with long-duration tests and directly built on the cathode heritage of the PPS-1350-G (Prioul 2007). At the research level, CNRS–ICARE (Orléans) has characterized large LaB_6 hollow cathodes from 5 A to 70 A, including detailed electron temperature and turbulence measurements using Thomson scattering diagnostics (Tsikata 2020, Mazouffre 2021). These French programs have provided insights into cathode stability and scaling in the same current class as the NASA thrusters mentioned above.

In Russia, Fakel has developed and flown a family of cathode–compensators (K- and KH-series) that include LaB_6 cathodes operating in the 5–50 A regime, such as those used on the SPT-140 Hall thruster now integrated on commercial spacecraft (Arkhipov 1995). Russian institutes including MIREA and Moscow Aviation Institute (MAI) have manufactured and tested LaB_6 hollow cathodes in this current range, both as standalone devices and integrated with Hall thrusters (Parakhin 2009, Semenkin 2021). Fakel researchers have reported standalone experimental studies of high-current cathode-compensators up to ~50 A, establishing design practices for durability and ignition reliability (Arkhipov 1995).

While NASA's campaigns underpin much of the U.S. knowledge base, parallel research and development in France and Russia have independently advanced hollow cathode science and flight heritage in the mid-current, 5–50 A class over several decades.

3. *High-Current*

High current hollow cathodes are currently defined as cathodes capable of delivering from 50A to more than 500 A of discharge current and are foreseen for the next generation of high power (<10 kW, up to 100-200 kW) thrusters. The development of high current cathodes with a low-temperature thermionic insert (namely LaB6) started in the 1970s mainly for fusion applications (Tsai 1982, Goebel 1978) to act as hydrogen or deuterium ion sources for neutral beam injection heating in fusion experiments. Recent high power electric propulsion development requires flight qualified hollow cathodes able to deliver high discharge current for the long duration mission foreseen (generally above 10,000 h). As an example, the 12-kW Advanced Electric Propulsion System AEPS (Frieman 2022) by Aerojet Rocketdyne needs up to 50A of discharge current, the X3 nested 3 channel Hall thruster (Hall, 2022) developed by University of Michigan requires above 300 A to operate at full power (100 kW), both SAFRAN's PPS20k (Zurbach 2011) and SITAEL's HT20k (Andreussi 2019) require up to 80 A of discharge current, and the IRS SX3 applied-field MPD thruster (Boxberger, 2019) has been recently upgraded to include a LaB6 hollow cathode, that at full power would be capable of 500 A. Earlier, in 2017, Wordingham developed a 600 A LaB6 hollow cathode and used standalone test results to develop models of the device. Finally, we also note that BaO based cathodes operated up to 600 A are being developed and studied by Martelli, 2025, that utilize a specialized cermet material formed from tungsten and barium calcium aluminate-scandate (532X), which can be started without the use of a heater.

Testing high current hollow cathodes can be more challenging than low currents ones. First, in general, higher current cathodes require higher mass flow, which in turn requires higher pumping speed capacity. Then, the heat dissipated by the cathode to the anode, the experimental setup, and the chamber is higher and can lead to overheating of the structures. Finally, higher current cathodes are more subject to plasma instabilities and need to be tested to assess at which operating condition plasma instabilities arise, which requires careful design of the electronics and the data acquisition system, and data analysis to quantify the level of instability with the operating parameters.

B. Anode Configuration

Hollow cathodes are tested in standalone mode in diode configuration with their keeper electrode and an electrode not part of the cathode structure and typically referred to as an external anode, as shown in Figure 7a. Both the keeper and external anode behave as electron collectors and the external anode substitutes for the ionization region of the thruster and ion plume, as shown in Figure 1b.

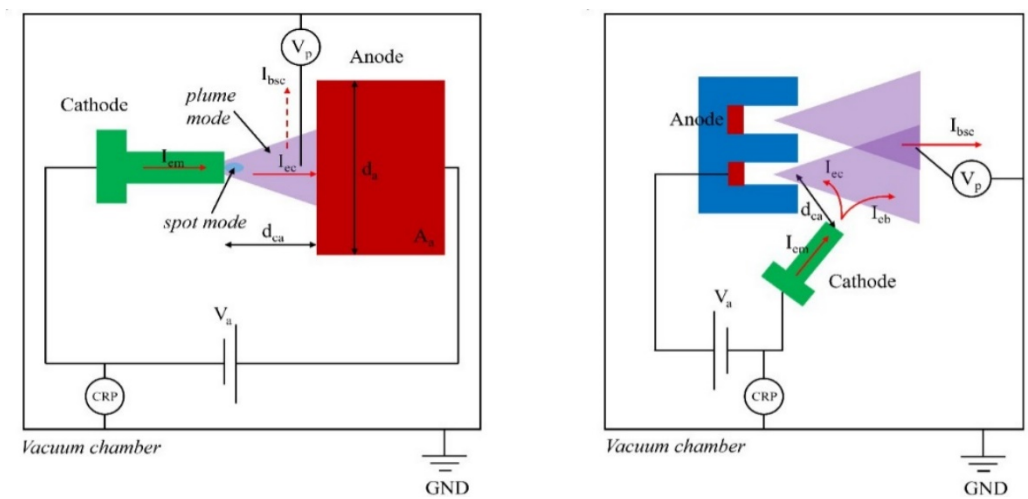

Figure 7. Hollow cathode testing with (a) external anode and (b) with a Hall thruster.

Certain macroscopic discharge parameters are of interest when testing the cathode in standalone configuration. For a self-sustained cathode operation, the anode potential is equivalent to the cathode coupling potential when operating with the Hall thruster. The cathode-to-ground or cathode reference potential (CRP) is an indicator of the emitter sheath potential and the interaction between the cathode and the facility (Sommerville 2007, Becatti, 2019). In cathode standalone testing, such parameters are heavily influenced by the external anode configuration, namely its position with respect to the cathode, d_{ca}, and geometry (shape and surface area, d_a, A_a). The most common anode shapes for standalone operation include planar/disk, conical, and cylindrical.

Standalone testing defines an ideally closed system with the anode power supply operating in a current-controlled mode. When in spot mode, the plume of the cathode has little to no coupling with the facility (chamber walls) (Csiky, 1969) while the anode collects the required electron current, I_{ec}. The potential structure along the discharge centerline in standalone mode is rather simple, as shown in Figure 8, with a sheath potential drop at the emitter surface, V_{sh}, rather constant potential along the

emitter region and increasing potential in the cathode-keeper gap and the plume region towards the anode (Hall 2021, Goebel 2007). The anode potential, V_a, can be seen as the sum between the CRP and the plasma potential, V_p, and close to the emitter sheath potential for spot mode (Goebel 2008, Potrivitu 2018). Therefore, when in spot mode with sufficient flow rate, the V_a and V_p are relatively low (Csiky, 1969) and the CRP is more negative (Sommerville, 2007, Thomas, 2013) since the emitter collects a sufficiently high ion current reducing the emitter wall potential with respect to the surrounding facility ground, GND. The sheath potential, equaling the difference between the plasma potential in the emitter region and the CRP, is hence relatively low (Potrivitu 2018).

On the other hand, when operating in a transition or plume mode, significant coupling between a more divergent and diffuse cathode plume and the surrounding facility walls leads to larger electron beam stray current, I_{bsc}, affecting the local GND. The CRP in this case becomes more positive (smaller in magnitude) (Thomas 2013, Kamhawi 2012) and the plasma potential considerably increases. Larger anode potentials are typically recorded suggestive of larger sheath potentials at the emitter needed to accelerate the lower ion current in plume mode operation. (Potrivitu 2018) This clearly contrasts with the more negative CRP (larger in magnitude) corresponding to healthy operation in spot mode where the plasma plume is well confined next to the cathode exit plane with no visible plasma attachment at the anode.

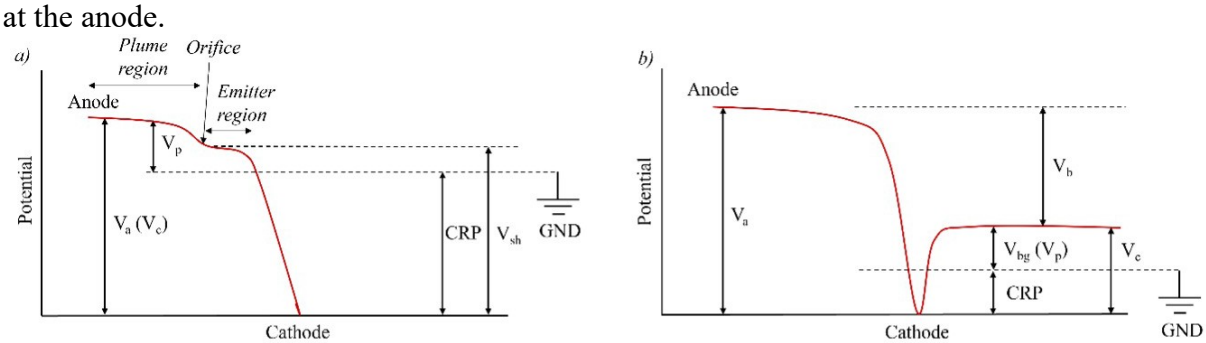

Figure 8. Potential structure for left: hollow cathode standalone testing with an external anode and right: Hall thruster

1. Cathode-Anode distance

Several experiments have been conducted to assess the influence of the cathode-anode distance on the cathode operation (Potrivitu 2018, Hall 2021, Csiky, 1969, Hall, 2019). The main findings were as follows:

1. smaller cathode-anode distances tend to promote spot mode operation, with a lower anode potential, high plume plasma density, and low electron temperature and plasma potential; the ionization instability is not present in the cathode plume;
2. larger cathode-anode distances lead to transition and plume modes, with a higher anode potential, lower plume plasma density, and high electron temperature and plasma potential; the ionization instability is present in the cathode plume with characteristic fundamental frequency, f0, peaks and harmonics in the range 10-150 kHz, however with lower fundamental frequency at larger cathode-anode distances (Potrivitu 2018).

Such changes in cathode plume morphology, plasma properties, and anode potential and discharge stability are depicted in Figure 9.

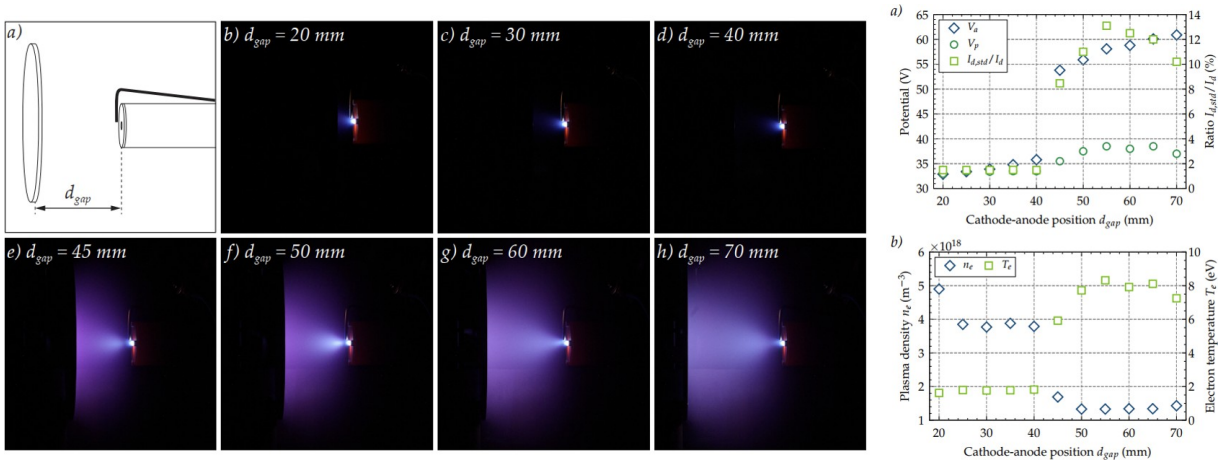

Figure 9. Transition to plume mode for a 5 A-class LaB6 hollow cathode when the anode position is changed and plasma properties 10 mm downstream of the cathode exit plane and discharge stability. (Potrivitu 2019)

2. *Anode Geometry*

Several studies focused on the anode geometry influence on the cathode discharge. (Potrivitu 2019, Hall 2021, Qin 2017) Planar/disk anodes lead to lower anode potential despite differences in collection area (Potrivitu 2019). These anodes also result in lower V_p, higher n_e, lower T_e, (Qin, 2017) a relatively constant ion velocity along the cathode centerline, and narrow ion energy distribution functions (Potrivitu 2019). However, the unrepresentative local neutral environment (Hall 2021) and their higher susceptibility to changes related to their position with respect to the cathode, (Potrivitu 2018) make the planar/disk anodes a less attractive option for standalone testing of hollow cathodes. This choice of anodes should be particularly avoided when testing high current cathodes operating at relatively large flow rates.

Cylindrical anodes might allow for a more representative local neutral density to thruster operation, but tend to induce higher V_a, larger V_p and T_e, lower n_e, and wider IEDFs with ion velocities increasing towards the anode (Potrivitu 2019). Moreover, larger diameter cylindrical anodes lead to less pronounced increase in anode potential at larger d_{ca} (Hall, 2019). It is also worth mentioning that short cylindrical anodes could lead to unrepresentative high anode potentials even when the surface area of the anode remains identical to that of the disk anode. This could be due to the current collection pattern at cylindrical anodes, where the strong plasma flow diffusion in the plume could push the attachment further back at the anode.

3. *Anode Material*

Lastly, anodes in standalone operation can be subjected to high power deposition especially when testing high current cathodes. Therefore, the anode material can vary from stainless steel, copper and brass to refractory metals such as tungsten and even graphite. Moreover, at high current operation,

active cooling of the anode can be achieved with water or other cooling fluid circulated through a pipe wrapped around the anode.

Although the anode configuration for cathode standalone testing impacts the observed anode potential and measured plasma properties in the cathode-anode gap, the internal plasma of the cathode and emitter temperature seem to remain unaffected by variations in d_{ca} or anode diameter (Hall 2021) (note that the experiments have been conducted with a relatively strong axial magnetic field at the cathode of 325 G).

4. Anode Selection

It is clear from the literature that anode configuration plays a significant role in the operation of standalone cathodes. Therefore, selection of anode configuration should consider the following:

1. Minimize the anode's influence on local plasma conditions in the near-cathode region (e.g. neutral density, etc.)
2. Replicate the coupling potential typically observed when operating in the integrated thruster configuration (this will be discussed further in **section III.C.**)
3. Enable spot-mode (or rather, a stable mode) operation at the nominal design point (current/flow rate) with sufficiently negative CRP magnitudes.
4. Satisfy engineering constraints, such as fitting the setup in the testing chamber, allow diagnostic access, and operate without active cooling.

Appendix B

Review of Hollow Cathode Models

The first hollow cathode employing a thermionic electron emitter flew in space in 1970 onboard NASA's Space Electric Rocket Test- SERT 2 (Byers 1970). It is interesting to note here that Byers, 1970, and others performed standalone testing of the SERT II hollow cathodes to evaluate their performance independently from the thruster. Specifically, Byers, 1970 conducted a parametric investigation of SERT 2 mercury hollow-cathode neutralizers in a bell-jar environment, systematically varying flow rate, geometry, and keeper conditions, and demonstrated strong agreement with in-flight thruster behavior. Rawlin, 1970, also tested SERT 2 hollow cathodes in bell-jar setups to assess durability and potential failure mechanisms, confirming their robustness for extended missions.

After the SERT 2 efforts EP propellant shifted to noble gases. At the transition time, the design of hollow cathodes was mainly based on semi-empirical scaling laws as the Hg cathodes were robust when operated with noble gases for periods of a few to many thousands of hours. The empirical approach changed in the 2000s, when the 30,000 hr Extended Life Test on the 30cm NEXT ion thruster (Sengupta 2004) revealed cathode failure mechanisms that were not well understood. Since then, a renewed effort in the modeling and simulations of hollow cathodes started, with the aim of understanding life limitations and to aid life testing efforts for flight qualification. Modeling efforts also increased when plasma properties were measured inside the hollow cathode and in the proximity of the cathode and keeper.

Although the hollow cathode features a relatively simple geometry, its operation gives rise to a flow field characterized by an interplay of plasma physics and continuum, transition, and free-molecular fluid dynamic phenomena. Cold propellant, traditionally a noble gas such as xenon, krypton, or argon; enters the cathode at a few meters per second before reaching the emitter region. Ignition of a hollow cathode discharge is achieved by either (1) using a heater to raise the emitter up to thermionic temperature or (2) initiating a Paschen breakdown that cascades into a plasma discharge, which is used to heat the emitter up to thermionic temperature.

In the first case, after gas flow is started and a keeper electrode bias is applied, electrons are thermionically emitted from the emitter that ionize the gas within the hollow cathode, forming a weakly ionized plasma. In the second case, a large voltage of 600V or more is applied between the cathode and the keeper to cause a Paschen breakdown. Then, the electrons and ions generated in the glow-like discharge formed after the breakdown collide with the emitter wall heating it up to thermionic emission temperature where the cathode transitions to normal operation. The potential difference between the plasma and the cathode surfaces establishes across thin sheaths, across which both electrons, albeit retarded, and ions can travel and heat the walls. Once steady state operation is achieved, the heater, if used, is switched off allowing the cathode to operate in a self-heated mode.

Near and within the cathode orifice plate, compressibility and viscous effects become important. Here boundary-layer behavior and volumetric plasma processes account for ion production and collection at the emitter orifice where recombination into neutral atoms occurs. Net electron emission from the orifice region includes electrons conducted through it from the insert region, electrons

produced by ionization, and electrons emitted and collected on the orifice. As the gas flow exits through the orifice, the mean free paths for neutral and charged species can approach and exceed the orifice diameter, challenging continuum assumptions. Additionally, the electric field between the cathode and the keeper and anode accelerates electrons to high Mach numbers, potentially leading to non-Maxwellian energy distributions and the onset of plasma instabilities. In many electric propulsion systems, external magnetic fields further influence the near-cathode region.

The need for cathode modeling at increasing complexity is judged necessary to estimate cathode life and potentially to avoid the need to perform long life tests. Cathode modeling is also important because models can provide estimates of parameters such as neutral behavior, ion and electron velocities, and ion temperature; which are difficult to acquire near the cathode with plasma diagnostic tools.

Several 0-D and 1-D theoretical models of the hollow cathode have been developed, which now serve mostly to aid cathode design (0D models) and to understand life limiting mechanisms such as orifice erosion and barium depletion (1D models). Siegfried 1984, Katz 1997, Katz 1999, Domonkos 2002, Katz 2003, Mizrahi 2013, Capacci 1997, Salhi 1992, Pedrini 2015, Wordingham 2017, Taunay 2019, Taunay 2022, Potrivitu 2022, Bosi 2021, Coletti 2008, Coletti 2009, Taccogna 2015, Parra 2006).

In addition, high-resolution 2D modeling of hollow cathodes has advanced significantly in the past decade. These simulations provide spatially resolved insight into the plasma structure inside the cathode insert and cathode and keeper orifice regions and beyond, and provided crucial information on both steady-state properties and information of effects of instability onset, growth, and saturation. (Lui 2015, Mikellides 2018, Levko 2013, Mikellides 2015, L´opez-Ortega 2018, Guerrero 2019, Sary 2017a, Sary 2017b, Kubota 2019).

The modeling efforts conducted to date have been helpful in improving our understanding of hollow cathodes. Nevertheless, cathode testing is still crucial to perform, as this testing provides valuable information to the simulations, validating them and the underlying hypotheses behind the complex plasma models employed. This is most true given the fact that the plasma is highly collisional inside at the emitter region but transitions to a collisionless (at least classically) regime outside, making it difficult to have a first-principles complete model of the full cathode-to-anode plasma.

Experimental data collected in stand-alone testing configurations are needed especially to inform the model of the following:

- **Inputs and initial/boundary conditions.** Input parameters must be defined to run high-fidelity models, such as propellant type and flow rate, discharge current, and eventual applied magnetic field. Then, thermal and plasma boundary conditions must be specified, depending on the type of model under development, such as wall temperature (in particular emitter temperature), plasma density on the axis, but also thermal properties of the components, are needed for the simulations.
- **Model output validation.** Experimental parameters are needed to validate models. This is typically done using measurements of the cathode electrical characteristics, e.g. current/voltage curves, keeper voltage etc., to spatial and temporal measurements of the plasma properties such as plasma density, electron temperature, plasma potential, flux and energy distributions.

Validated models are useful as they can be used to interpret experimental observations, de-convolve diagnostic ambiguities, and extrapolate beyond testable regimes. Recent coordinated efforts, some described below, have emphasized the use of multi-diagnostic datasets, combining Langmuir probe sweeps, spectroscopy, IR thermography, and laser-induced fluorescence (LIF), to constrain models with high confidence. Parameters such as wall recombination rates and electron transport coefficients are increasingly derived through inverse modeling techniques, where models are tuned to reproduce measured discharge behavior. In addition, physics discovery from modeling has increasingly informed experimental campaigns, prompting the development of targeted diagnostics to validate these effects.

This iterative loop—where modeling guides diagnostics and experimental results refine simulations—is becoming central to the development of more durable and capable cathode technologies.

Appendix C

Passive and Active Monitoring of Standalone Hollow Cathode Tests

This section is thus divided into three parts which discuss the methods in which cathode performance and plasma stability are monitored in standalone cathode operation: passive performance measurements, invasive techniques, and non-invasive techniques.

1. Performance Measurements

The simplest diagnostics for standalone cathode experiments are passive DC and AC measurements of cathode surfaces. These measurements monitor the behavior of the anode, keeper, heater for the duration of a test. If the experiment requires a magnetic field (such as for HT or GIE integration testing) the magnetic coil currents and voltages are also monitored. These measurements are often referred to as performance measurements. High-speed performance measurements might be required, if the transient behavior of the cathode operation is important, such as ignition events or oscillations due to plasma instabilities or power supply interactions. This section will provide recommendations for diagnostic techniques to acquire these measurements.

DC Measurements. While the DC measurements can be monitored at the supply, the display on the supply can often be inaccurate. Therefore, it is recommended to acquire the DC voltages and currents from voltage dividers and in-line shunt resistors, respectively. The shunt resistors for current measurements are typically on the order of 1 Ω. The resistor type and power rating for the shunt resistor on the anode depends on the current regime of the cathode. High-current cathodes often require resistors mounted to a thermal sink to prevent overheating during operation. These measurements can be performed near the exit of the power supply. However, the lines used might contribute to some voltage loss, so sense lines installed at the surface of the component is recommended. An eyelet crimp connector can be crimped to the center conductor of a coaxial cable and the eyelet crimp connector can then be installed such that it makes contact with the surface of interest (anode, cathode, heater line, etc.).

AC Measurements. High-speed AC measurements of performance might be needed depending on the demands of the experiment. For example, heaterless cathode ignition can occur on the order of ms, so it is imperative that the ignition characteristics are accurately monitored. Alternatively, high-speed measurements of anode current can provide insight into the cathode stability. Large-scale oscillations on the order of the discharge current are known to occur in cathodes, particularly without a magnetic field. High- speed anode measurements can also capture plasma waves that propagate longitudinally, such as ion acoustic turbulence, which is known to exist in cathode plumes. (Jorns 2017) Further, high speed measurement of the floating keeper voltage is often used to characterize the transition from the stable spot mode cathode operation to the unstable plume mode. Large-scale oscillations of floating keeper voltages can be an indicator of localized plasma instabilities, which may drive erosion of cathode surfaces.

High-speed voltages can be acquired using high-voltage probes (HVPs) on sense lines or at the

feedthrough, depending on the length of cabling inside the chamber. HVPs can also provide the DC voltage in addition to the AC behavior. In this case, voltage dividers as discussed previously, might not be needed. High-speed current can be captured using a clamped current probe, which, similar to HVPs, can provide both the AC and DC component for bandwidths typically on the order of 500 kHz to 1 MHZ. However, clamped current probes can drift due to thermal equilibration, necessitating constant calibration. Therefore, it is recommended to rely on the in-line resistors for the DC measurement. Alternatively, Pearson coils can provide the AC component of the current at high bandwidths (up to 35 MHz) and do not exhibit the drifting behavior observed in clamped probes as it only provides the AC component. These signals can be logged via data acquisition systems (DAQs) or oscilloscopes. These devices have limitations on input currents and voltages and have limitations on bandwidth. Therefore, care must be taken to select voltage and current probes whose output remain within the limits of the DAQ or oscilloscope.

Figure 10 shows a schematic in which performance metric measurements can be made. Note that the cathode is grounded in this configuration. If the cathode is left floating, the cathode-to-ground voltage should also be monitored using aforementioned voltage-sense methods. Not all of these measurements might be needed for the standalone cathode operation. The measurements that are selected depend on the cathode application and maturity. It is recommended that, at minimum, all DC measurements of voltages and currents and AC measurements of the discharge current and floating keeper voltage are monitored during standalone cathode operation. The AC discharge current can provide insight on cathode stability and the AC component of the keeper voltage has been used in the literature to identify transitions to unstable operational modes. Increasing voltage oscillations on the keeper are suggested as a proxy for oscillatory plasma behavior near the keeper face.

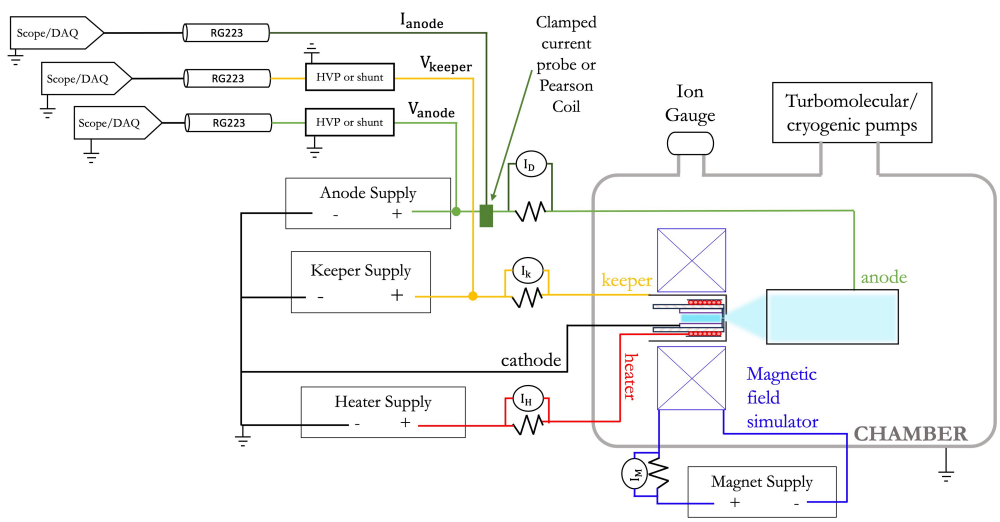

Figure 10. Schematic of performance metric measurements on standalone cathode operation.

2. Invasive Techniques

The plasma parameters in the different regions of hollow cathodes have been extensively researched starting from the 2000s, when extended cathode testing proved life limiting mechanisms and their deviation with respect to the semi-empirical laws employed until that time. However, probing the

hollow cathode is complicated due to its generally miniaturized geometry, and the high-dense plasma characterizing the internal regions and part of the plume. The high-density plasma implies that any intrusive diagnostic in these regions must be inserted with fast scanning mechanisms to avoid probes overheating and eventually melting. In addition, the general small dimension of this technology requires the construction of miniaturized probes, sometimes at the limit of the development capabilities. That said, intrusive diagnostics measurements are key to understanding the hollow cathode behavior and potential lifetime. In this Section, the intrusive probes that can be used on standalone cathode operation are reviewed.

Thermocouple (TC). TCs can be used to monitor a variety of components in the stalone cathode setup. The emitter temperature is a key experimental parameter of standalone cathode testing to predict emitter lifetime, (Lafferty 1951) and to be used as an input parameter for 2-D simulations. (Mikellides 2020) Thermal models of the hollow cathode are difficult to construct due to uncertainties in the components thermal contact and the material properties at high temperatures. Therefore, acquiring the temperature at measuring points far away from the emitter, e.g. the tube base, the keeper, etc., is not a clear indication of the emitter temperature.

The emitter temperature is a complex measurement to acquire due to the small dimensions in play. It must be remembered that hollow cathodes operate in general at high temperatures, depending on the emitter type. BaO-W cathodes operate around 1,200˚C, while LaB_6 cathodes operate at up to 1,700˚C. High- temperature TCs, such as Type C (Tungsten Rhenium) and Type B, R or S (Platinum Rodium), are usually employed for these high-temperature applications. A common way to monitor the emitter temperature is by spot-welding a TC to the orifice plate and correcting for the emissivity of the orifice plate. For example, Hall et al. performed temperature measurements of the cathode orifice plate temperature by spot-welding a Type-R TC to the outer radius of the cathode orifice plate. (Hall 2021) However, it has been shown in the literature that orifice plate temperatures can be higher than the emitter temperature by 60-90˚C in the mid-current regime. (Polk 2007)

Quite notably, the temperature along a LaB_6 insert of a mid-current cathode was measured through type C TCs by Polk et al. (Polk 2015, Guerrero 2021) To measure the emitter temperatures in three locations, the insert was perforated using electro-discharge machining (EDM) in order to place three 1.6 mm diameter Idaho Laboratories Type C sheathed TCs longitudinally. The TCs were distributed evenly in the azimuthal direction and installed at three different depths in the insert. In order to assure a good thermal contact between the TCs and the location where the temperature is measured, the TCs were installed using a pre-loaded spring strategy. By using this approach, they could guarantee that each individual TC can accommodate the thermal expansion of the different components of the cathode assembly while keeping their terminations against the insert wells at any point in time during the experiments. The results of this investigation showed the different temperature profile of the emitter at different discharge current, mass flow rate, and orifice diameter.

While emitter temperature is likely the most critical temperature measurement for standalone cathode operation, it is recommended that TCs be used throughout the cathode setup, such as along the anode, at the base of the cathode tube, near the keeper orifice, and the magnetic field simulator. It is also recommended to capture the ambient temperature of the chamber.

Langmuir probe. The most used intrusive plasma diagnostics able to infer all the plasma parameters such as electron temperature, plasma density and plasma potential, are Langmuir probes. Developed by Langmuir in the 1920s, (Chen 1965) a Langmuir probe is a small electrode immersed into a plasma biased at variable potentials. The collected ion or electron currents (in the form of current-voltage trace) in response to different voltages provides information about plasma density, ne,i, electron temperature, Te, and plasma potential Vp.

For standalone cathode characterization, a swept-voltage Langmuir probe is typically employed. (Chen 1965) A voltage ramp at approximately 100 Hz is applied, with the bias generally ranging from −20 V to +30 V for xenon hollow cathodes. The lower bias limit is set to ensure the probe is operated well within the ion saturation regime, while the upper bias limit is determined relative to the anode potential. To ensure the probe is driven well above the plasma potential, it is recommended the upper limit is set to 10 V above the anode voltage. As a result, the required upper limit scales with cathode operating conditions, particularly in cases where the anode potential is elevated. The bias limits must also be re-evaluated for conditions where the lower bias limit must extend further negative to reach ion saturation or where the upper bias limit must increase to account for elevated anode potentials, such as:

- operation with alternative noble gases (e.g., Ar, Kr)
- operation with non-noble propellants
- unstable operating regimes characterized by elevated plasma potentials (Goebel 2021).

Due to the general high plasma density in the hollow cathode regions, it is recommended to design the Langmuir probe to operate with the thin-sheath approximation, where the ratio between the probe radius and the Debye length is greater than 10. The thin-sheath regime is applicable when the sheath thickness is small compared to the probe dimensions, and the area of the sheath edge can be approximated as the area of the probe surface, regardless of its shape (Chen 1965). With this analysis, the electron temperature has an error of about ± 0.5 eV and plasma density can be found within about a factor of two.

Finally, operating a pair of Langmuir probes in ion saturation can be used to investigate the propagation of waves in the hollow cathode plume. (Beall 1982) For example, this two-probe technique has been used to capture the evolution of ion acoustic turbulence in the cathode plume (Mooney 2025, Georgin 2020, Jorns 2017). Investigating these waves can provide insight into regions of heightened erosion due to energetic ion production.

Emissive probe. Emissive probes are standard plasma potential measurement diagnostic, particularly designed for high-frequency measurements up to about 2 MHz. (Sheehan 2017) An emissive probe is a small electrode (usually tungsten) configured as a filament loop, heated to a suitable temperature needed to thermionic emit sufficient electron current into the plasma. The probe heating is ensured by applying direct current at the filament. As the applied current increases, the probe emits as many electrons as it collects. When there is no sheath between the plasma and the probe, the probe will float close to plasma potential. A convenient mode of operating an emissive

probe, used before in hollow cathodes, (Becatti 2021) is called ”floating emissive probe” and consists in isolating the filament and the power supply used to supply the heating current from ground and directly measuring the probe floating voltage. This technique, despite characterized by a higher error with respect to biased emissive probe technique, provides an easy and reliable method to measure the plasma potential without any currents collected by the probe. Therefore, the perturbations induced by the probe are less disturbing than other intrusive diagnostics. By contrast, the use of emissive probes have some disadvantages that one must considered for their application. The heater power supply must be insulated with respect to ground to assure that the floating voltage is measured, and the voltage measured by the probe is not exactly the plasma potential due to space charge limitation. The probe tip must be heated to provide large emission and assure that the floating voltage is close to the plasma potential. However, as stated in, (Sheehan 2017) if the probe surface is further heated to increase the emission level, a virtual cathode will form around the surface due to space charge effect, preventing additional electrons from escaping into the plasma. Chen (Chen 1965) specifies that since the emitted electrons have a relatively low energy compared to the hot plasma electrons, a double sheath tends to form at the probe surface, reducing the emission current. The potential well that is formed due to this effect prevents the probe from floating at the true plasma potential. The only exception is when the emitted electron temperature is equal to the plasma electron temperature, due to symmetry in the double sheath (Hutchinson 2002). A correction factor (usually about 0.6 T_e) can be applied to take into account the true plasma potential. However, it is more common to take the probe floating voltage as plasma potential, and the error associated to such measurement (including the correction factor) is about ±2 V.

Retarding potential analyzer. The Retarding Potential Analyzer (RPA) is a useful gridded device to evaluate the ion energy distribution based on a discriminator voltage which selectively filters ions according to their kinetic energy. (Hutchinson 2002) It is recommended for standalone cathode operation to measure the energetic ion production near the keeper face with an RPA. Miniaturized RPAs are the best for this application as they can be oriented close to the keeper face. A miniaturized RPA developed by Goebel et al. (Goebel 2021) was oriented axially downstream in such a way to detect the ions directed towards the keeper face. The RPA was designed as a three grid assembly, constructed to minimize the overall dimensions. The probe diameter and thickness are respectively 5 mm and 3 mm. The first grid floats at the local plasma floating potential to minimize perturbations to the plasma, and the second grid is biased at negative potential (-25 V) to repel the electrons. The third grid, called discriminator grid was biased at a fixed potential or separately biased with a ramped sweep. Applying a positive biased voltage at the discriminator, only the ions with energy-to-charge ratio greater than the bias voltage can pass through and reach the collector. A flat tungsten disk is used as the collector, with the material selected to minimize secondary electron production. The RPA discriminator grid used a selected frequency and amplitude voltage ramp to evaluate the ion energy distribution, (Kanarov 2008) and it was also employed at fixed voltage to evaluate the temporal and spatial characteristics of the ions with an energy above the selected threshold. Applying the selected voltage ramp to the discriminator grid one can find the ion voltage distribution function f(V) related to the slope of the collected signal. (Hutchinson 2002)

3. Non-invasive Techniques

Non-intrusive diagnostics alleviate the high level of measurement uncertainty introduced by intrusive diagnostics. The latter affect the plasma property, such as the potential structure, density and species

temperatures, but come at a typically lower cost and ease of deployment.

Several non-intrusive plasma diagnostics have been used to characterize the plasma properties in the various regions of a hollow cathode discharge in standalone mode with an external anode. Table 2 summarizes the recommended non-intrusive plasma diagnostics for hollow cathode standalone testing with suggested best-practices herein. The list remains non-exhaustive and some diagnostic techniques, such as microwave interferometry, are not discussed.

Table 2. Recommended non-intrusive plasma diagnostics for hollow-cathode standalone testing

Parameter	Technique
Cathode temperature	Pyrometry
Relative neutral density, n_n	OES, LIF
Neutral thermal velocity	LIF
Electron density, ne	ITS, OES
Electron temperature, Te	ITS, OES
Ion temperature, Ti	LIF
Relative ion density, ni	LIF
Ion energy & ion drift velocity	LIF
Electron energy & electron drift velocity	ITS
Plasma instabilities and turbulence	CTS

Pyrometry. Several pyrometric techniques have been used to assess the temperature of a hollow cathode during operation. Some techniques are purely non-invasive, with the detector and collection optics situated outside the vacuum chamber. These can lead to poor spatial resolution and it can be difficult to measure internal cathode temperatures, such as the emitter temperature. (Oshio 2025, Daykin-Iliopoulos 2019, Polk 1993, Domonkos 1998) On the other hand, other tech- niques rely on an optical probe, typically made of quartz or sapphire, inserted in the emitter region (from the upstream or downstream of the emitter) to collect light intensity which is further fed into the detector via an optical fiber. (Hall 2022, Polk 2007, Oshio 2025) While the latter type of diagnostics can be more accurate than a TC, it is still considered intrusive and can affect the plasma property in the emitter region.

A major limitation of pyrometric techniques is the reliance on a priori knowledge of material emissivity, which is a function of temperature and wavelength. Another limitation of such techniques is the interference of the plasma radiation with the black-body radiation from the cathode which can be circumvented by operating setup at near-infrared (NIR) wavelengths. Commercial disappearing filament optical pyrometers operating at 650 nm are a fast and inexpensive way to measure the cathode temperature. (Daykin-Iliopoulos 2019) Nevertheless, one should make use of the emissivity of the material as a function of the indicated temperature by the device, proceed to calculate the effective emissivity which also considers the optical transmittance of the chamber window, and finally compute the true surface temperature. (Daykin-Iliopoulos 2019)

Ratio pyrometry deploying the two-color temperature method relies on the ratio of light intensity at two close NIR wavelengths eliminating in the process the uncertainty induced by the emissivity of the materials and the surrounding plasma radiation. Such a method is preferred due to its insensitivity to material emissivity and facility setup (chamber window material, plasma radiation). (Oshio 2025) The surface temperature can be derived from the ratio between the surface radiance at two NIR wavelengths defined by Planck's radiation law. The suggested wavelengths are 1200 nm and 1500 nm due to their proximity to the peaks of the radiation spectrum for the expected cathode temperature range of 1200 to 1500°C. (Oshio 2025)

It is worth mentioning that pyrometric devices and procedures rely on calibration techniques to minimize measurement uncertainty. (Oshio 2025, Polk 1993, Domonkos 1998) For ratio pyrometry, traceable calibration lamps can be used to correct the measured brightness value against the known radiation ratio of the calibration spectrum data, leading to uncertainties below 100 degrees at measured temperatures around 1800 K. Thermocouples can also be deployed together with a graphite calibration oven mimicking the shape of the cathode as an in situ calibration method. Such a method leads to measurement uncertainties of a few degrees in the case of ratio pyrometry. (Hall 2022) To minimize the measurement uncertainty, it is recommended to bin-and-average several traces for both the calibration and the measurement. (Hall 2022, Oshio 2025)

Optical Emission Spectroscopy (OES). OES, or spectrographic plasma analysis, is a non-invasive passive type of plasma diagnostics easy to deploy and can offer information on several parameters, such as electron density and temperature and local neutral density. The collection of light intensity typically happens via sapphire or quartz optical fibre and can be non-intrusive (Daykin-Iliopoulos 2019, Malik 2000) through either line-integrated light collection, point measurements with collimated optics, or intrusive via optical probes inserted into the plasma. (Daykin-Iliopoulos 2005)

The light intensity recorded by OES setups can be related to plasma properties such as electron density and temperature and neutral density if appropriate plasma models are used. In general, laboratory plasmas can be described by three distinct models: the local thermodynamic equilibrium (LTE) model, the corona (CO) model, and the collisional radiative (CR) model. (Daykin-Iliopoulos 2005) Each model relies on a relatively heavy physical framework and their applicability is limited by the plasma properties under investigation. For instance, LTE models can only be applied with dense plasmas with electron densities in excess of $10^{20}\ m^{-3}$. (Malik 2000) Such plasma can be found at most in the orifice and some parts of the emitter region of hollow cathodes. The CO model on the other hand is suitable for less dense plasmas, with electron densities below $10^{15}\ m^{-3}$, (Malik 2000) such as in the far-field plumes of some hollow cathodes. The CR model is an intermediary framework between LTE and CO and considers stepwise collisional processes. (Daykin-Iliopoulos 2005) The CR model relies on a modified Saha equation and a ratio of spectral lines intensities to produce Boltzmann plots, (Wiese1991) where the slope of such plots is proportional to the electron temperature.

Since the plasma in a hollow cathode is mostly defined by a CR model, such technique is preferred when OES is chosen for plasma diagnostics. Several CR models for various gases are available in the literature, such as Xe, (Karabadzhak 2006, Rajput 2017, Zhu 2011) Kr, (Zhu 2011) and Ar (Zhu 2011, Zhang 2020). For Xe, the two-line intensities recommended for CR technique are 823.2 nm and 828.0 nm

due to their spectral proximity, reducing spectral sensitivity calibration errors, and their significant correlation with Te especially at low temperatures (Karabadzhak 2006).

A more direct method is proposed by Konjevi´c , 2012, and implies the computation of n_e based on the Stark broadening of hydrogen Balmer line at 486.135 nm. The full-width at half maximum of the fitted Voight profile of this $\lambda_{H-\beta}$ line can be directly linked to n_e if the Doppler and instrument broadening are known. (Daykin-Iliopoulos 2019) In order to obtain such measurements, small quantities of H2 need to be introduced in the discharge, typically 1-3% of the working gas flow rate, with minimal influence on the plasma properties. (Dakin-Iliopoulos 2019) Such technique proved successful for a cathode operating on Ar and Kr, but operation with Xe, even at mixtures up to $XeH_2$10%, were unsuccessful due to the strong emission of Xe close to the $\lambda_{H-\beta}$ line of interest. (Daykin-Iliopoulos 2019)

Finally, OES techniques have been used to approximate the local neutral density in the plume of a Hall thruster. (Jameson 2006) Although the results were just indicative of trends rather than magnitudes, the method can be improved via absolute calibration of the optical probe if the optical transmission probability is known as well as the absolute photon production rate in the test volume. The neutral density can be computed only with knowledge of the local electron density and temperature, which can in turn be measure with the same optical setup. Again, the strong atomic emission line of Xe at 823.2 nm is recommended as intensity source to infer the photon production rate. (Jameson 2006)

The measurement uncertainty for OES techniques is heavily dependent on the various assumptions made in the plasma models and the spectrometer resolution. Moreover, if measurements are taking place in the presence of strong magnetic fields effects such line splitting or Zeeman effect can increase the uncertainty. (Grimaud 2017) Stark and Doppler line broadening can be induced by electric fields in the plasma and high neutral temperatures. (Dakin-Iliopoulos 2019) The typical uncertainties for OES techniques are in the order of 20% for the electron temperature, (Zhang 2020) similar to Langmuir probes (Potrivitu 2019), and up to an order of magnitude for densities (Zhang 2020). In summary, Figure 11 shows the process for OES model selection and experimentation.

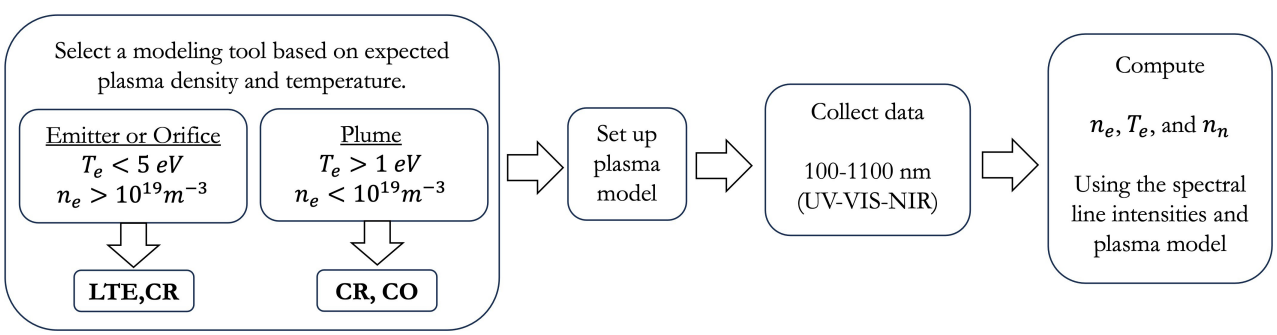

Figure 11. OES flow chart for neutral and plasma properties measurement.

Laser Induced Fluorescence. Since the ion behavior in the plume of hollow cathode can impact the cathode efficiency and lifetime, (Goebel 2007) it is recommended to evaluate locations where energetic ions are produced. This can be done non-invasively through LIF. The first LIF measurements of a hollow cathode plume were performed by Williams et al., 2000. The technique was soon adopted by several

research teams around the world and became a mainstream tool for the assessment of ion velocity distribution function (IVDF) which can further inform on the ion temperature, density, and drift velocity in hollow cathode standalone testing (Potrivitu 2019, Dodson 2018). LIF is preferred over other techniques, such as RPA, due to its non-intrusive nature, higher spatial resolution, no a priori knowledge of plasma potential required to infer the ion velocity, and only one species at a time can be probed (Dodson 2019). Furthermore, the technique can be used to construct the neutral velocity distribution functions (NVDF) and infer parameters such as neutral temperature, density, and velocity as previously shown for Hall thrusters. (Grimaud 2017, Mazouffre 2013) Such measurements are possible through the recording of the fluorescence radiation from excited metastable and resonant levels of atoms and ions with a laser beam. The velocity of the ion or atom corresponding to the direction of the laser injection beam can then be computed by measuring the frequency at which the laser beam is absorbed and based on the Doppler shift with respect to the studied transition unshifted frequency. (Mazouffre 2013)

Herein, the typical LIF technique is described. Note: a typical LIF setup is shown in given by Dodson. (Dodson 2018) The optical train contains an injection branch and a detection or collection branch. The recommended excitation frequency for Xe ions is 834.72 nm with fluorescence collection at 541.91 nm. This particular frequency is ideal due to its high transition probability and accessibility with solid-state diode lasers. (Mazouffre 2013) For Xe neutrals, excitation can be conducted at 834.91 nm with fluorescence observed at 473.4 nm. Several other excitation and fluorescence frequency pairs exit for Xe and Kr, (Mazouffre 2013) while ring-dye lasers versus solid- state lasers should be used for visible wavelengths instead of NIR ones. The continuous-wave laser beam from the narrow-band tunable laser diode can be coupled to a tapered amplifier before being fed to the chamber via a mechanical or optical chopper at frequencies 1 kHz and transported through 5-50 μm optical fibre. Typical laser power ranges from 500 to 700 mW with power densities of the injection beam of a few mW/mm^2 to avoid saturation effects. The laser's wavelength should be measured by a wavemeter while a scanning confocal Fabry–Perot interferometer with a large free spectral range can be used to verify the quality of the laser mode and detect mode hops. (Mazouffre 2013) The detection branch deploys a collimator lens to interrogate the plasma volume of interest, and the fluorescence light is fed into a 200 to 600 μm optical fibre. If the magnification of the collection optics is 1, the spatial resolution of the system equals the diameter of the collection branch optical fibre. A monochromator or a narrow-bandwidth interference filter isolates the fluorescence line from the collected spectrum while a photomultiplier tube is used to detect the light. If time-averaged LIF is performed, a lock-in amplifier is used to isolate the fluorescence light from broad plasma emission at the chopper frequency.

The technique can also be used to infer the radial velocity of the ions and neutrals and if the frequency of the laser is swept over a large enough range, the relative ion and neutral density can be computed as the integral of the IVDF/NVDF. One can obtain the absolute density only if the system is calibrated against a known source. (Grimaud 2017) Both slow and fast ion and neutral population can coexist in the cathode plume and the raw data can be fitted with single or dual-Gaussian curve (Dodson 2019) to deduce the most probable ion/neutral velocity and ion/neutral temperature. However, the technique can be prone to several uncertainties. Specular reflection of the laser beam off the cathode surface can induce a "ghost" mirror image of the VDF. (Grimaud 2017) The results are also susceptible to line broadening, hyperfine splitting, Zeeman splitting if a magnetic field is present, and saturation broadening. (Dodson 2018) This latter effect is proportional to the power density of the injection beam and is particularly problematic for far-field measurements where higher laser powers are

needed to achieve a satisfactory signal-to-noise ratio. Uncertainties up to 60 m/s in velocity[9] and 40% (Dodson 2019) in ion temperature have been observed for LIF in hollow cathode plumes.

Coherent and incoherent Thomson scattering (CTS/ITS). Both CTS and ITS have been used to characterize fusion plasmas (Gr'esillon 1982) and magnetron discharges. (Tsikata 2015) The first usage of CTS for an electric propulsion device was performed on a Hall thruster by Tsitaka et al. (Tsikata 2009) and allowed for the identification and characterization of the electron cyclotron drift instability in such devices. ITS has been used for electric propulsion devices such as microwave ion thrusters, (Yamamoto 2010) Hall thrusters (Washeleski 2013), and hollow cathodes. (Vincent 2017, Roberts 2025) Although complex and expensive, the technique is powerful allowing for direct information on electron temperature and density spatially-resolved measurements all in a non-invasive way. Large scattered signals, way above the noise level, can be obtained in high-temperature, high-density plasmas. Therefore, for low-temperature plasmas as in the case of hollow cathodes, with densities as low as $10^{16}\ m^{-3}$, CTS and ITS become challenging and require optimization for high sensitivity.

CTS is characterized by a scattering parameter $\alpha > 1$ with scattered radiation being recovered at scales larger than the Debye length showcasing collective electron fluctuations such as instabilities and turbulence. On the other hand, ITS is characterized by $\alpha << 1$, with the scattered radiation intensity being the sum of the contributions from each electron in the probed volume. (Vincent 2017) ITS can be used to infer the electron density, from the total number of electrons scatterers, and the electron velocity distribution function and thus electron temperature based on Doppler shift of the frequency of the scattered radiation due to electron motion. Vinvent et al. provides a setup of THETIS ITS bench, which is a typical layout for this type of plasma diagnostic. (Vincent 2017) The system has a transmission branch and a collection or detection branch. On the transmission branch, an Nd:YAG frequency-doubled laser produces pulses at 10 Hz with powers up to 700 mJ at a frequency of 532 nm. (Vincent 2017, Roberts 2025) This frequency is ideal due to the availability of high efficiency detectors and optics operating at this frequency. To ensure adequate signal-to-noise ratios when probing low density plasmas, the system is equipped with several apertures to minimize stray light effects. After passing through the plasma column, the incident laser beam is stopped in a beam dump which minimizes stray light return to the vacuum chamber. On the detection branch, a plane-convex lens collects the scattered light into a custom-made optical fibre bundle array. The array is designed to maximize the amount of scattered light collected. The collected light is then fed into a volume Bragg grating (VBG) which significantly attenuates light at 532 nm, composed primarily of stray light and Reighleigh-scattered light. A spectrometer and a camera are used to collect the scattered radiation after the VBG.

To extract the absolute electron density and temperature from the Thomson spectrum, the instrument is calibrated against a Raman scattering at pressures that offer spectra similar to the ones obtained with ITS. The calibration allows the identification of the transmission coefficient of the system which in turn leads to a direct computation of electron density from the Thomson spectrum. (Vincent 2017) Vincent et al also show result obtained along a hollow cathode discharge axis with ITS, Langmuir probes, and when using a fluid plasma simulation. While the electron density seems to be similar for both the Langmuir probe and ITS, the electron temperature measured by ITS is much lower. One of the possibilities is a temporary perturbation of the plasma due to probe insertion which leads to elevated electron temperatures when the Langmuir probe is used, emphasizing the shortcomings of such intrusive diagnostics. The major source of uncertainty when using ITS to measure the electron density and

temperature is the Raman cross-section at 8%. (Vincent 2020) Additional uncertainty should be included based on the signal-to-noise ratio at each probing location during spectrum fitting.

A typical setup for CTS is given by Tsik a t a el al. in which the CTS setup was used on a 200 W Hall thruster. (Tsikata 2021) More powerful lasers are used for this diagnostics technique at larger wavelengths as compared to ITS. A 10,600 nm (THz frequency), 40 W CO2 laser is suggested by Tsikata et al. (Tsikata 2021) The original laser beam is split as follows:

1. a primary beam, containing 99% of the laser power, used do define the observation wave vector and provide an electromagnetic wave field which scatters on the plasma density fluctuations before landing on an absorber
2. a local oscillator reference beam which is frequency-shifted with respect to the laser frequency by an acousto-optical deflector (AOD) to allow detection of spectra in the MHz range.

The two beams are then sent into the vacuum chamber via a periscope before passing through a translator-rotator which defines their relative positioning in terms of separation and orientation. The technique relies on heterodyne detection where an interference wave signal is produced by the local oscillator beam interacting with the scattered field from the plasma density fluctuations which is then transmitted to a detector. A signal demodulation procedure is then used, with reference to the original local oscillator signal, to retrieve the complex scattered signal.

The results are for an observation wave vector parallel to the magnetic field lines at this position, while the field lines are almost perpendicular on the cathode centerline and lead towards the thruster exit plane. Both kHz and MHz modes have been identified. The kHz mode appears at all wavenumbers and has been attributed to plasma azimuthal drift perpendicular to the magnetic field lines. The MHz mode is clearly an ion acoustic wave with clear frequency dispersion. The ion acoustic wave seems to travel in antiparallel direction to the observation vector (negative frequency), towards the thruster.